Razor Bollard- Installation Manual

Step 1: To make a concrete foundation as shown in Fig 1. Take the dimensions of the bolt and conduit pipe from Fig 1.

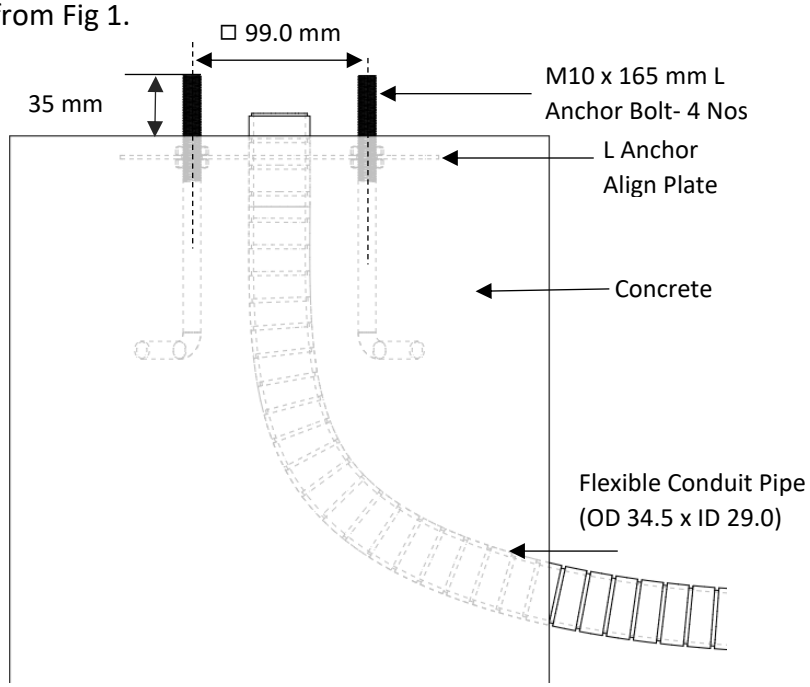

Fig.1

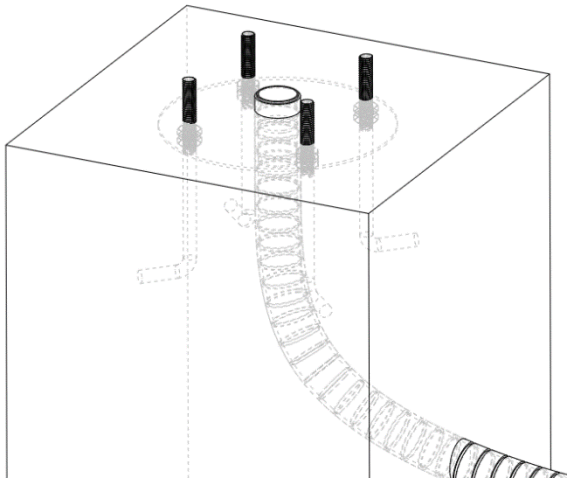

Fig.2

Note: The anchor bolt alignment is important.

Step 2: Take out the main supply cable (230 V) from the flexible conduit pipe and insert the M10 Nut.

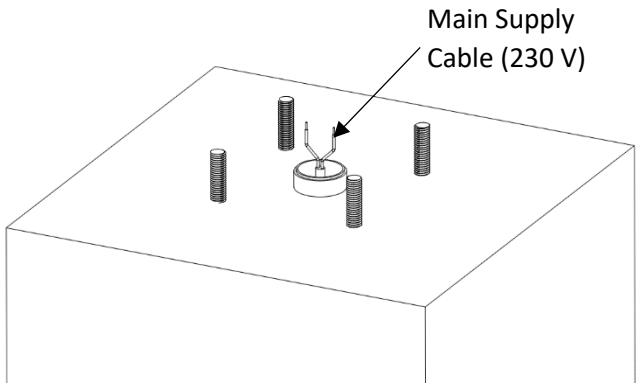

Fig.3

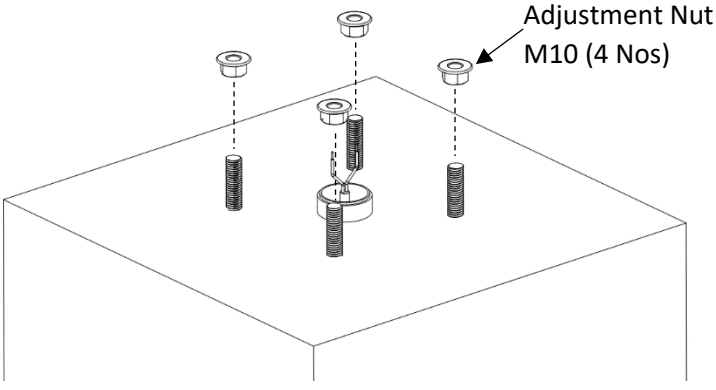

Fig.4

Step 3: connect the fixture cable with the Main supply cable with the help of an IP connector. To scan the QR code, get the IP connector instructions.

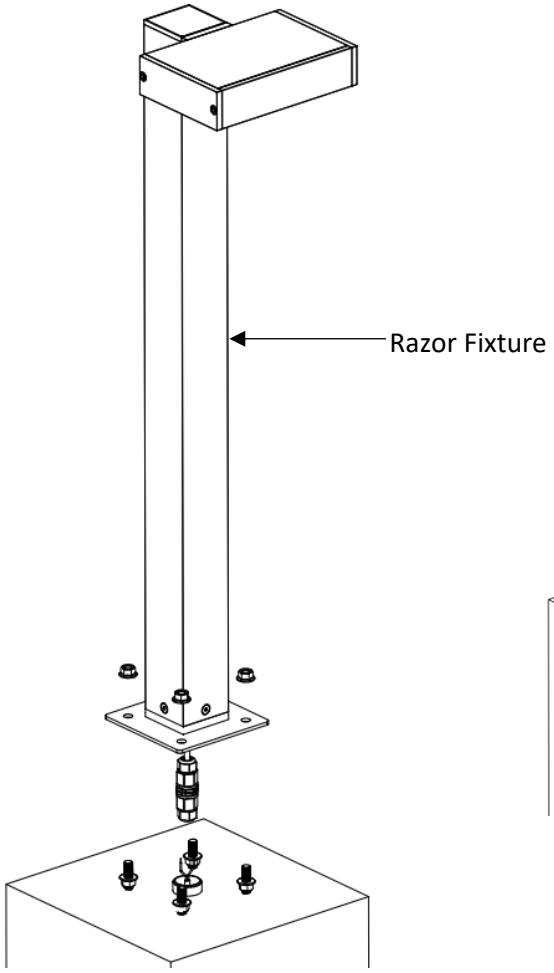

Fig.5

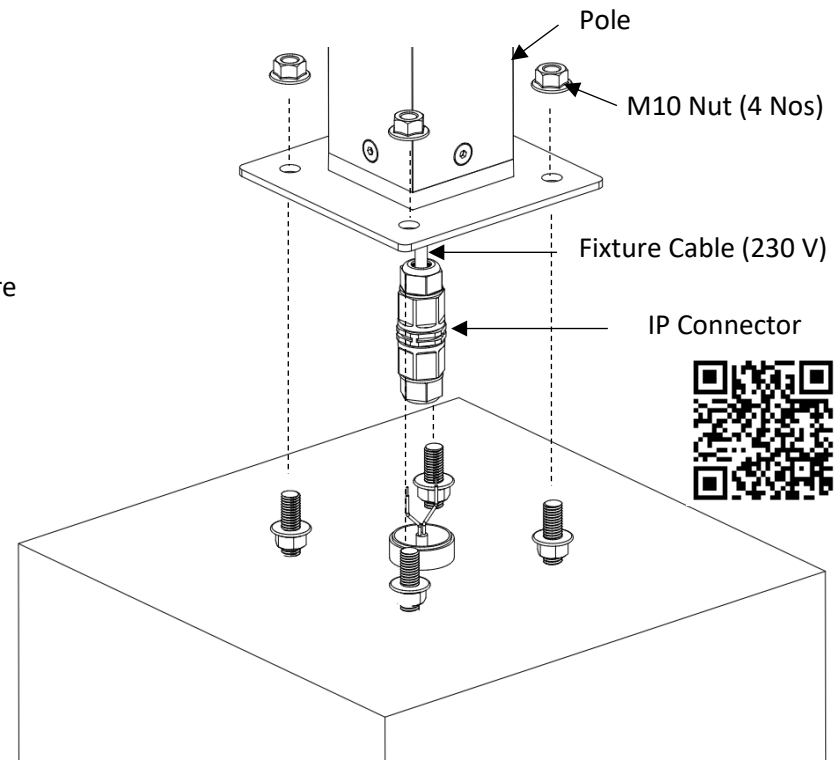

Fig.6

Step 4: Insert the IP connector into the conduit pipe as shown in **Fig.7** and place the whole fixture on the adjustment nut.

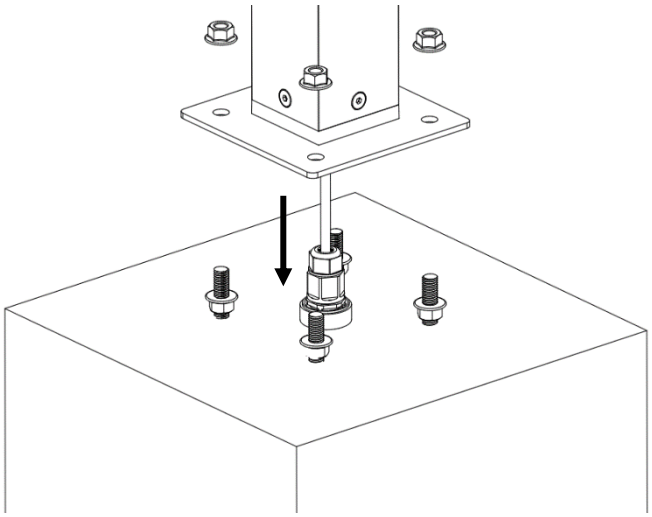

Fig.7

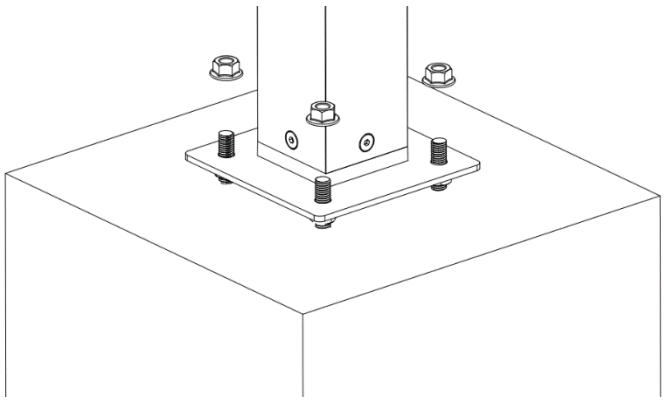

Fig.8

Step 5: Adjust the nuts for base alignment and check with the spirit level, then tighten the above M10 nuts.

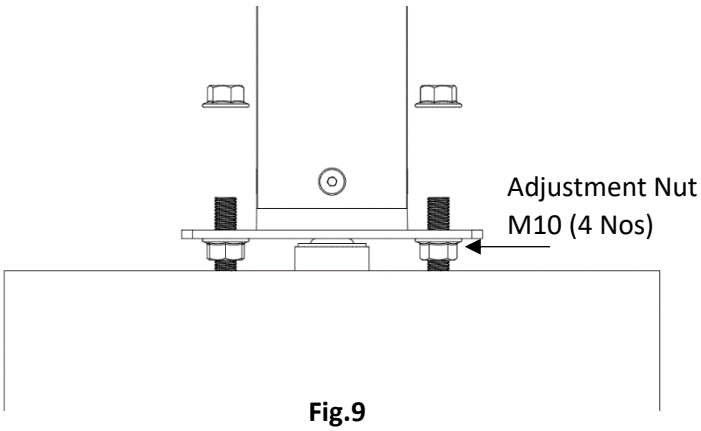

Fig.9

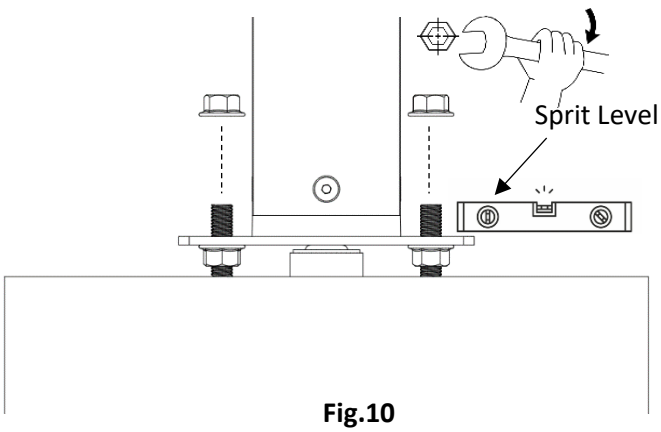

Fig.10

Step 6: Then use cement to fill the gap between the base and the foundation.

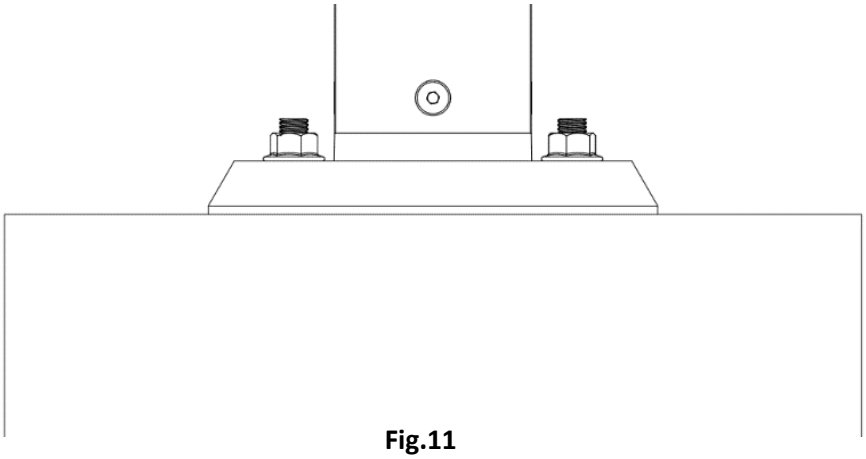

Fig.11

Installation is complete. Lights can be Turned On!

