EOS TRIMLESS WALLWASHER INSTALLATION MANUAL

Step 1: Make a cut out of Diameter 70mm in the ceiling as shown in below figure.

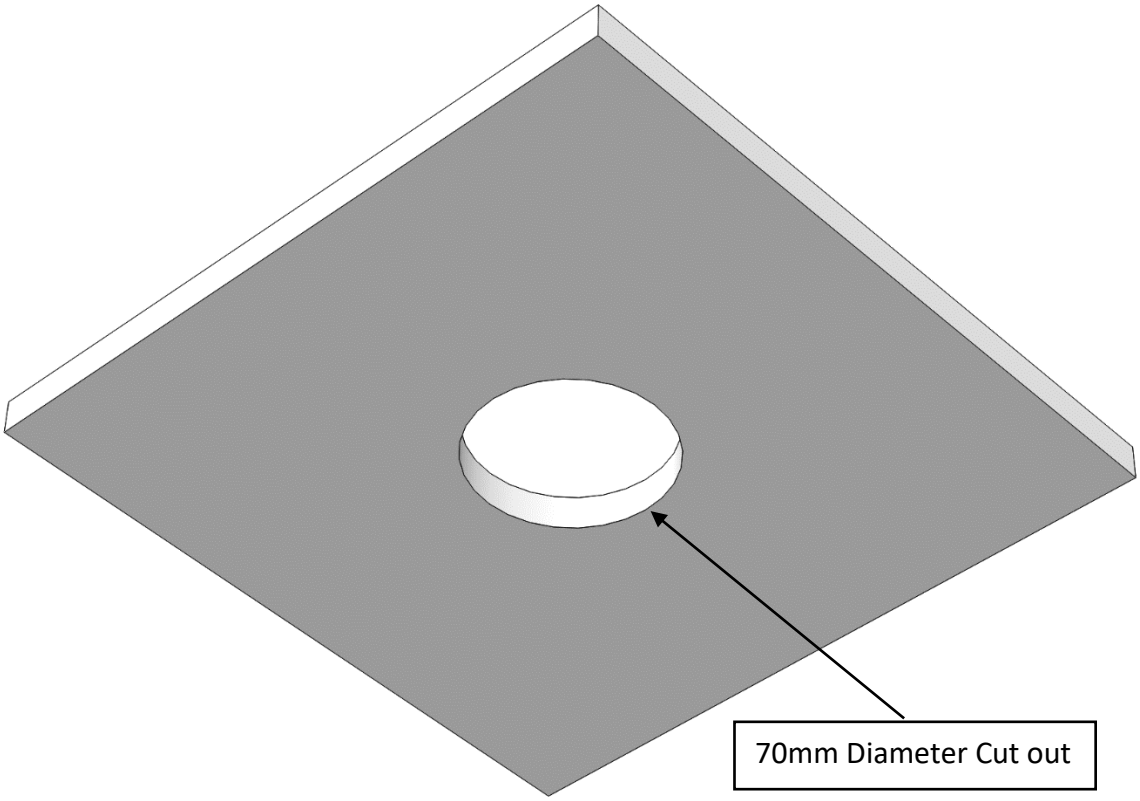

Step 2: Attach the Trimless Plate to the Housing with the help of screws as shown in the figure below.

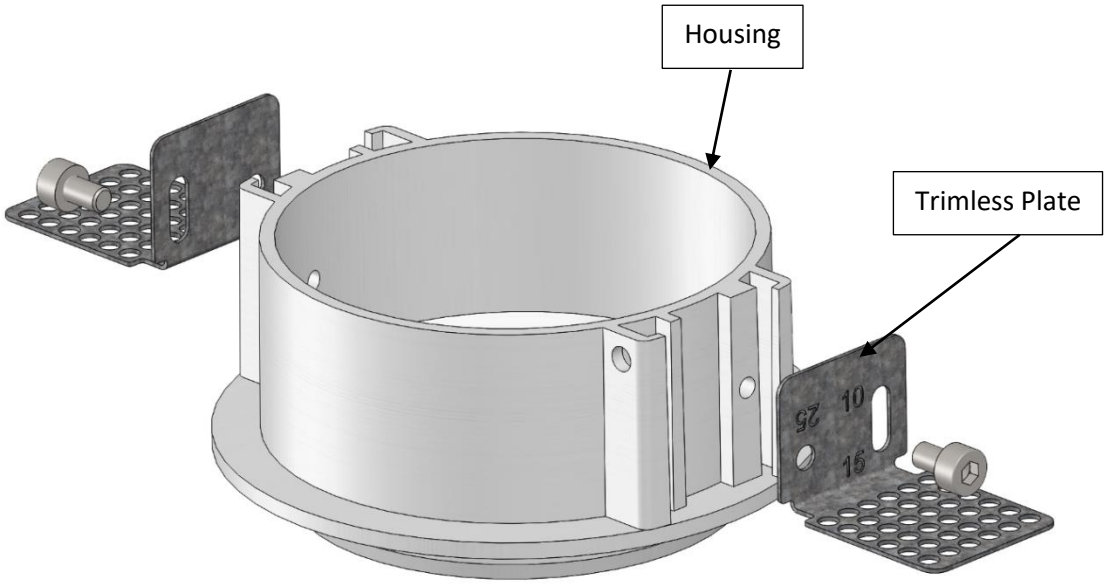

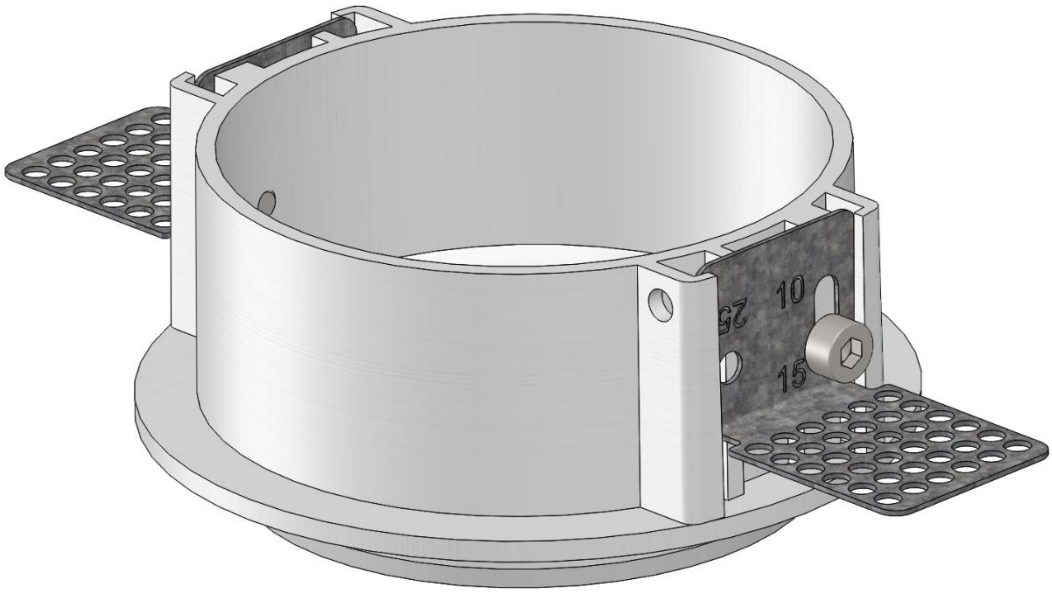

Step 3: Insert the Housing attached with the Trimless plate in the cut out by tilting such that the base of housing should be at the same level as the POP.

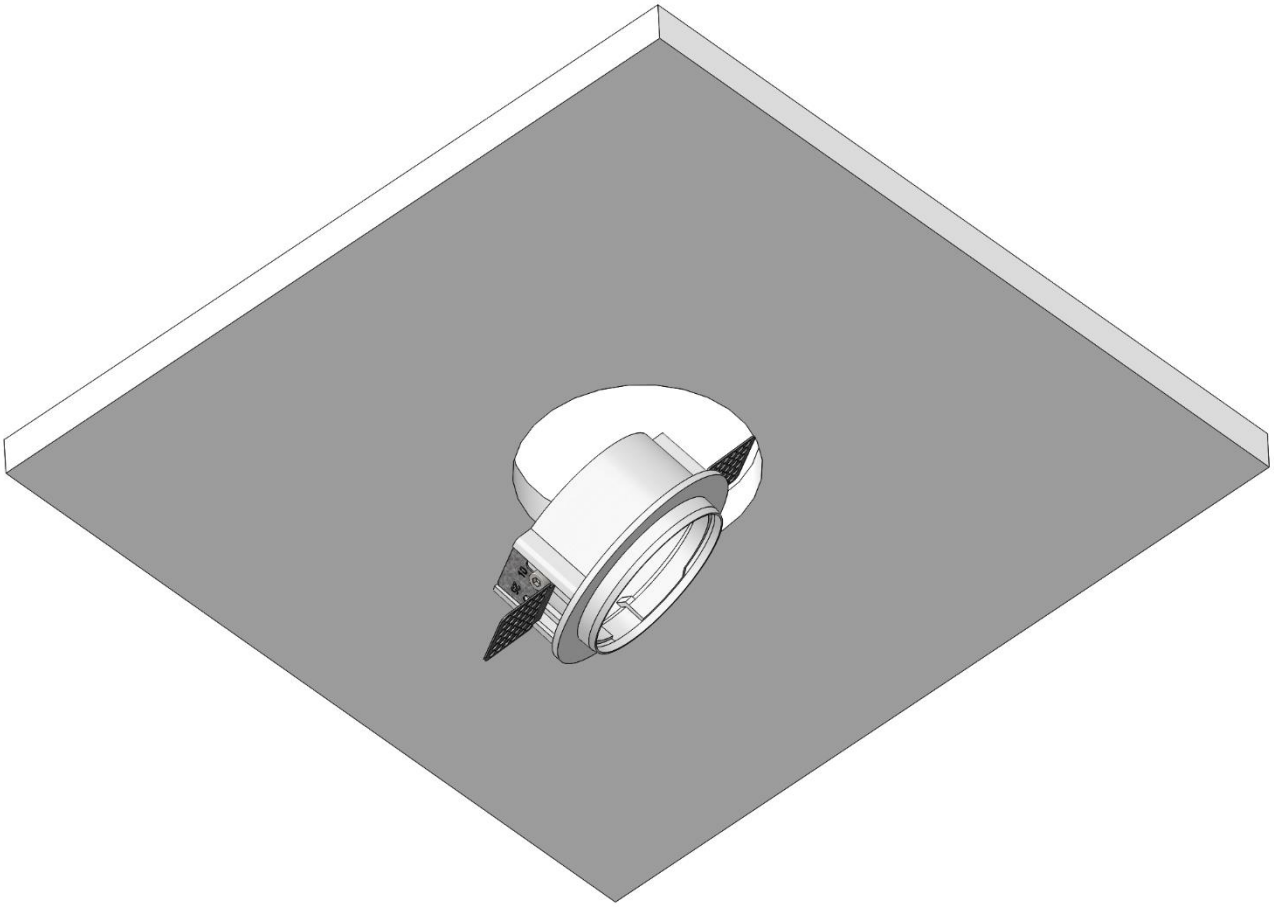

Top View

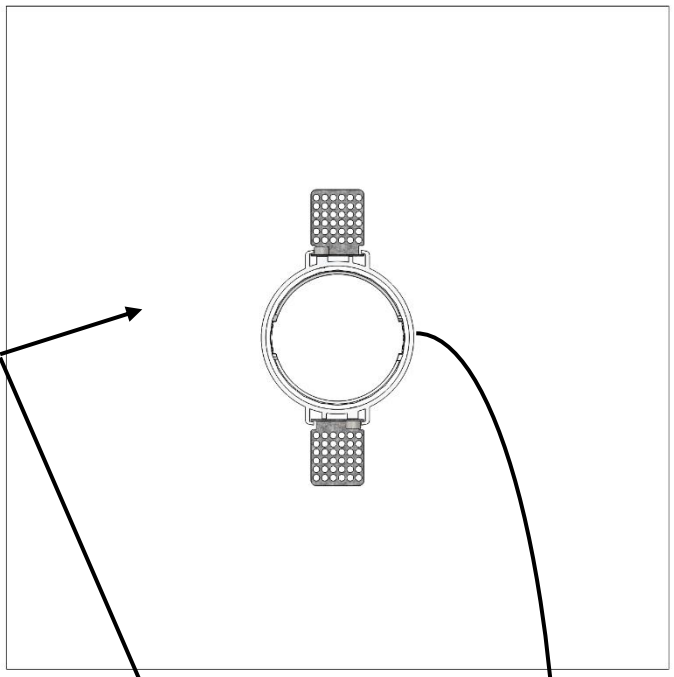

This cut portion must be parallel to the wall in case of wallwasher, otherwise the light won't fall properly on the wall.

Wall

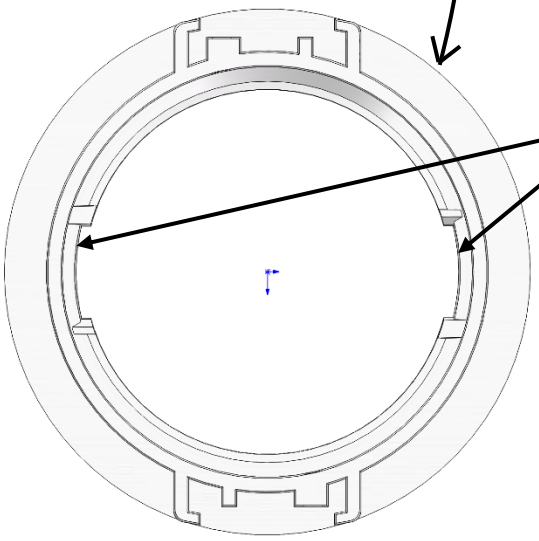

This cut portion must be parallel to the wall in case of wallwasher, otherwise the light won't fall properly on the wall.

Enlarged View

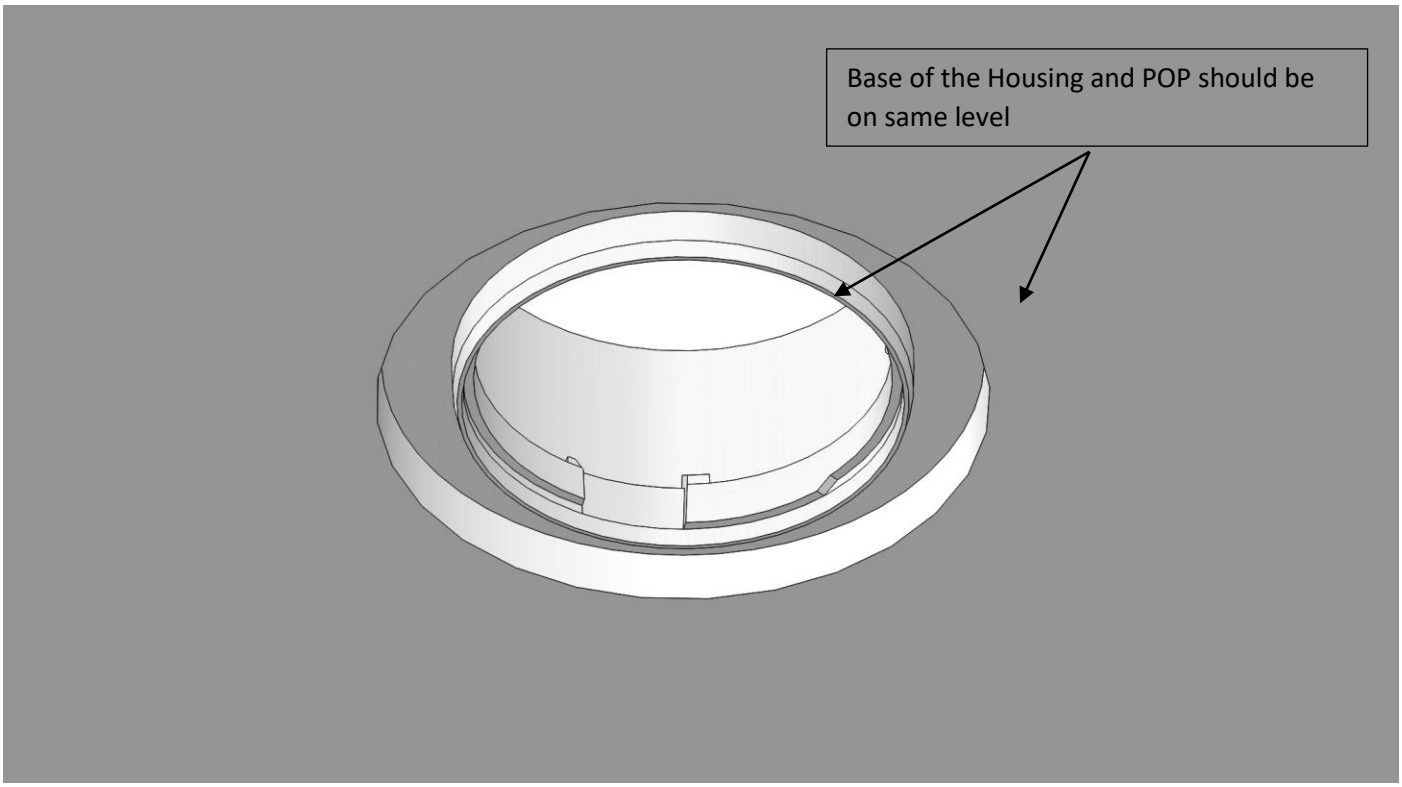

Step 4: Screw the POP ceiling to the trimless plate to fix the housing.

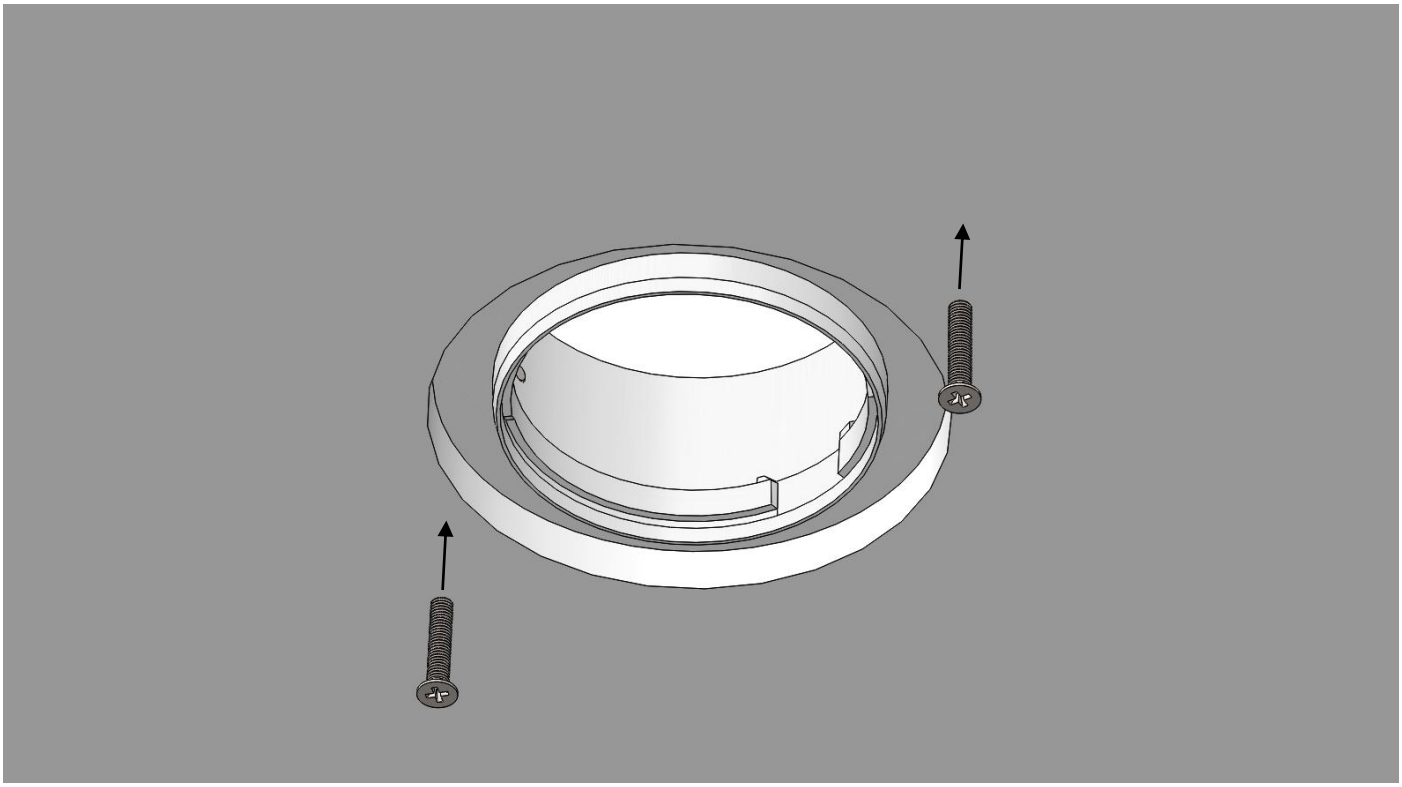

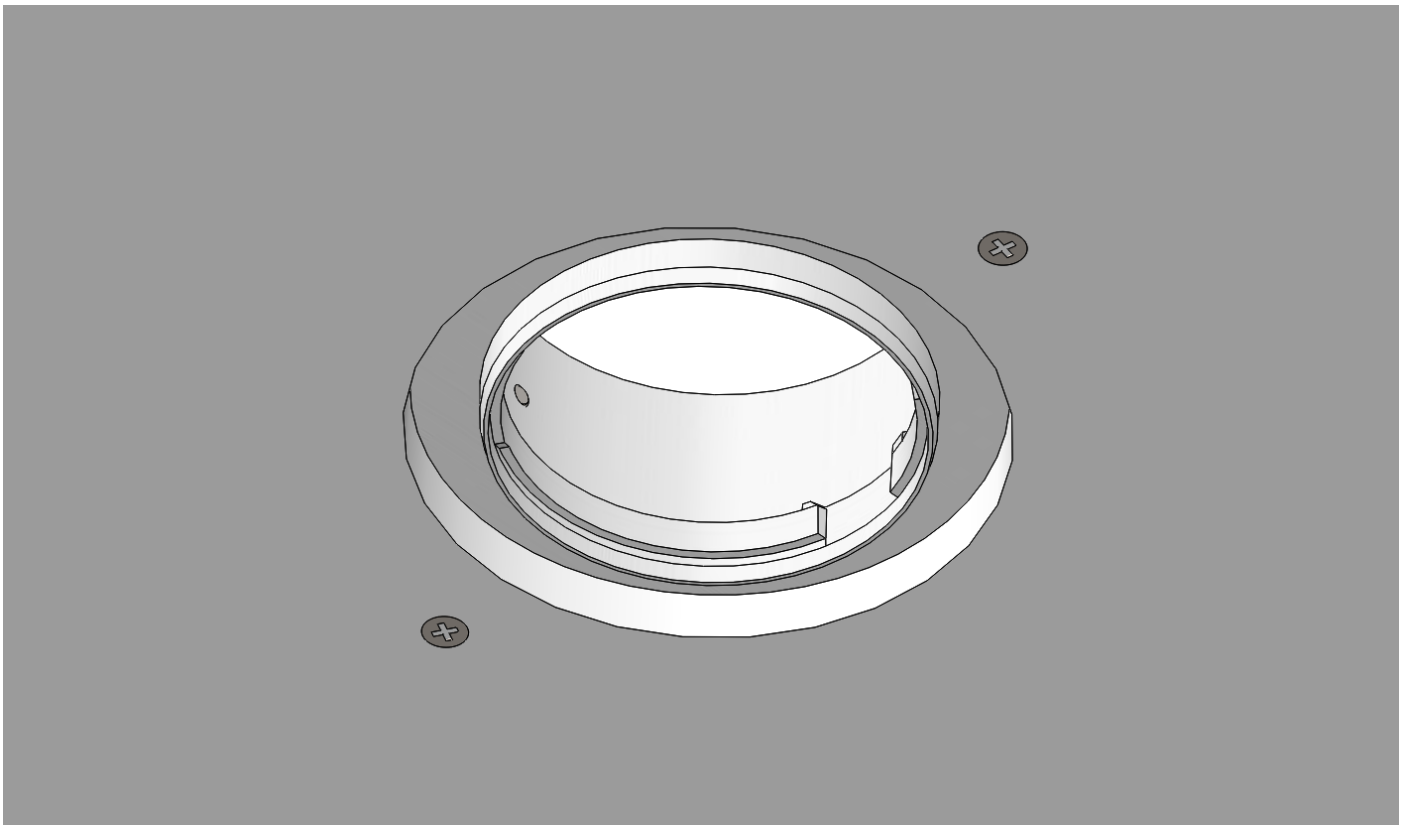

Front View

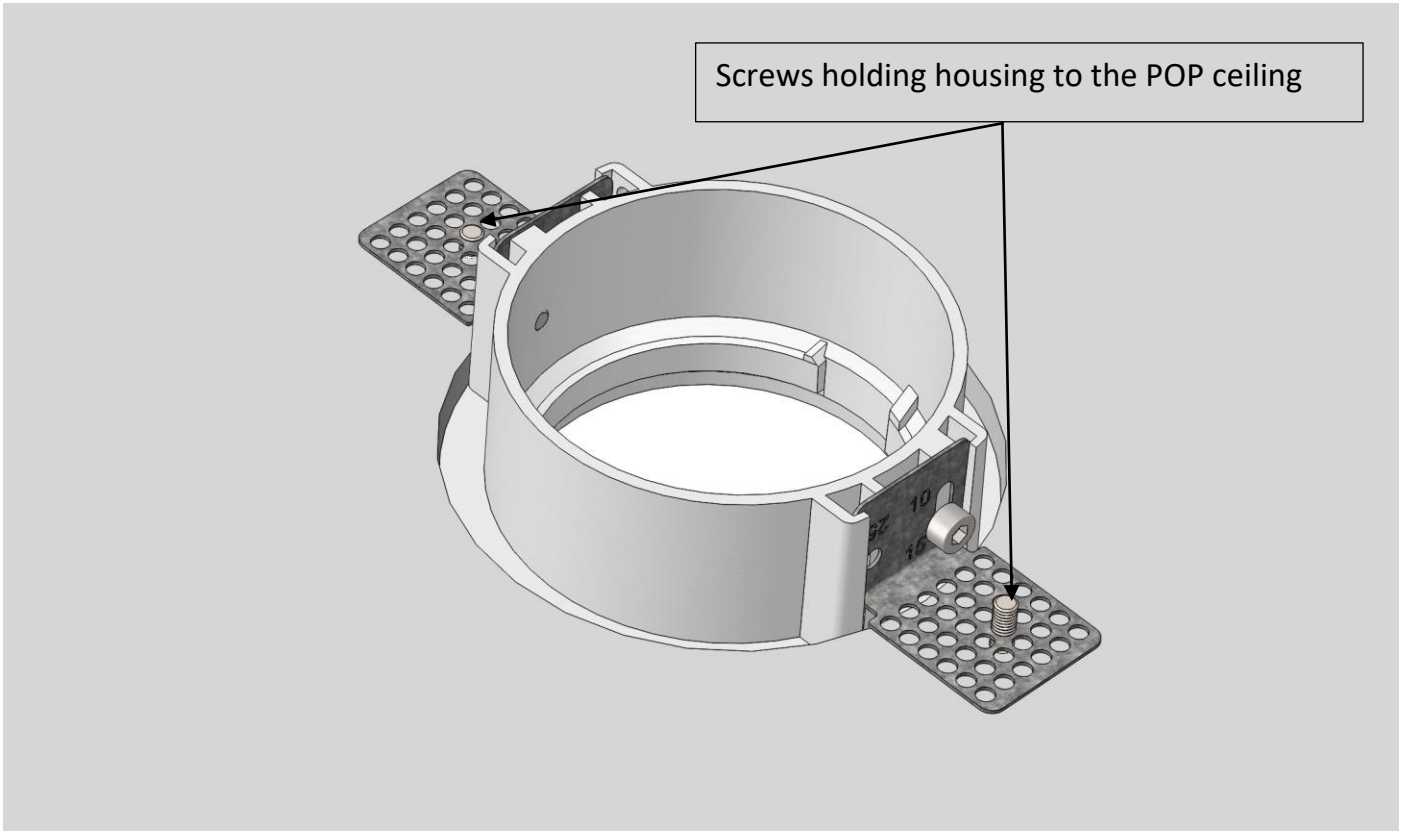

Rear View

Step 5: Finish the POP ceiling with Putti/POP. Fill the portion shown in Blue colour with Putti and make sure Putti doesn't goes into the inner side of housing.

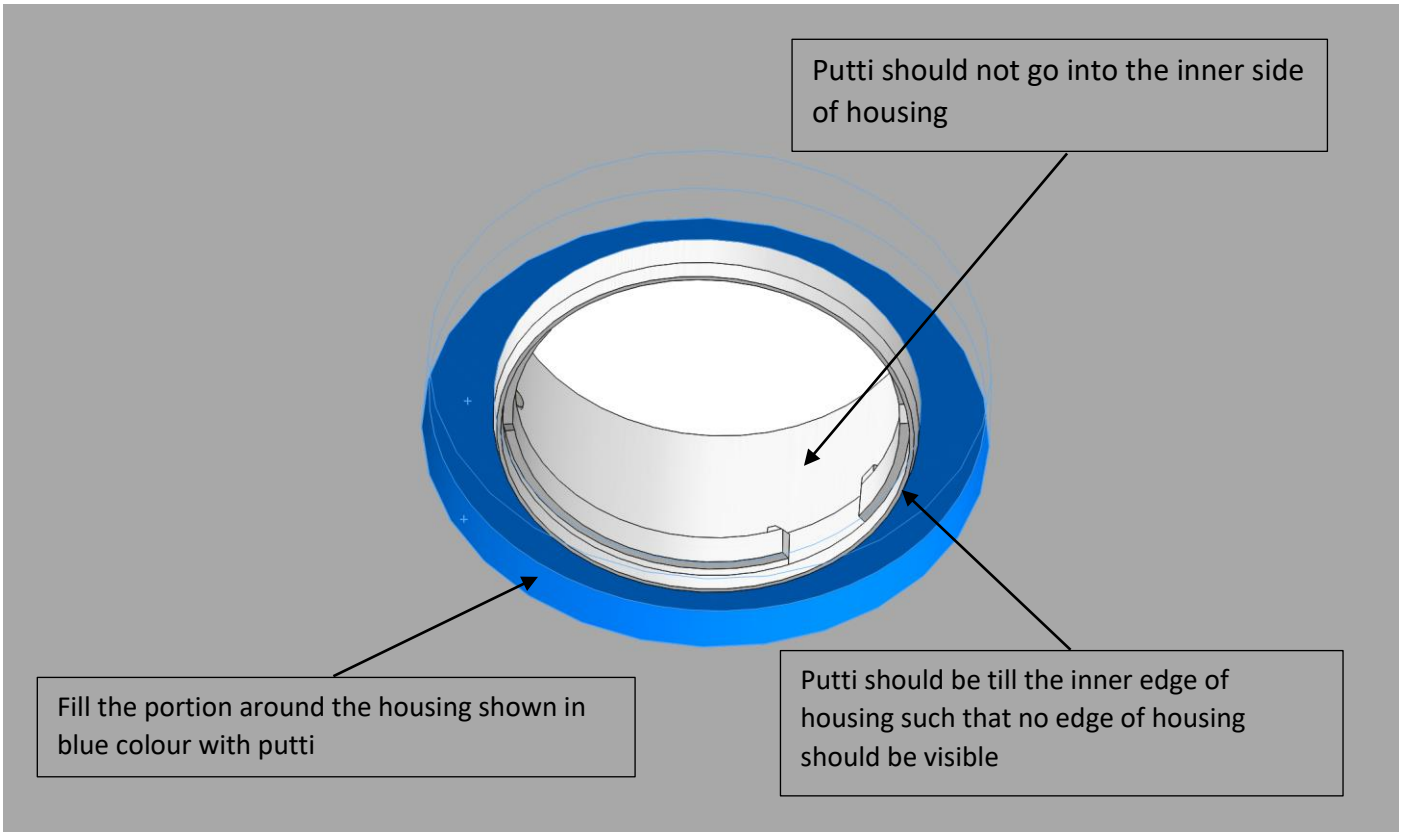

Step 6: Let the putty dry properly.

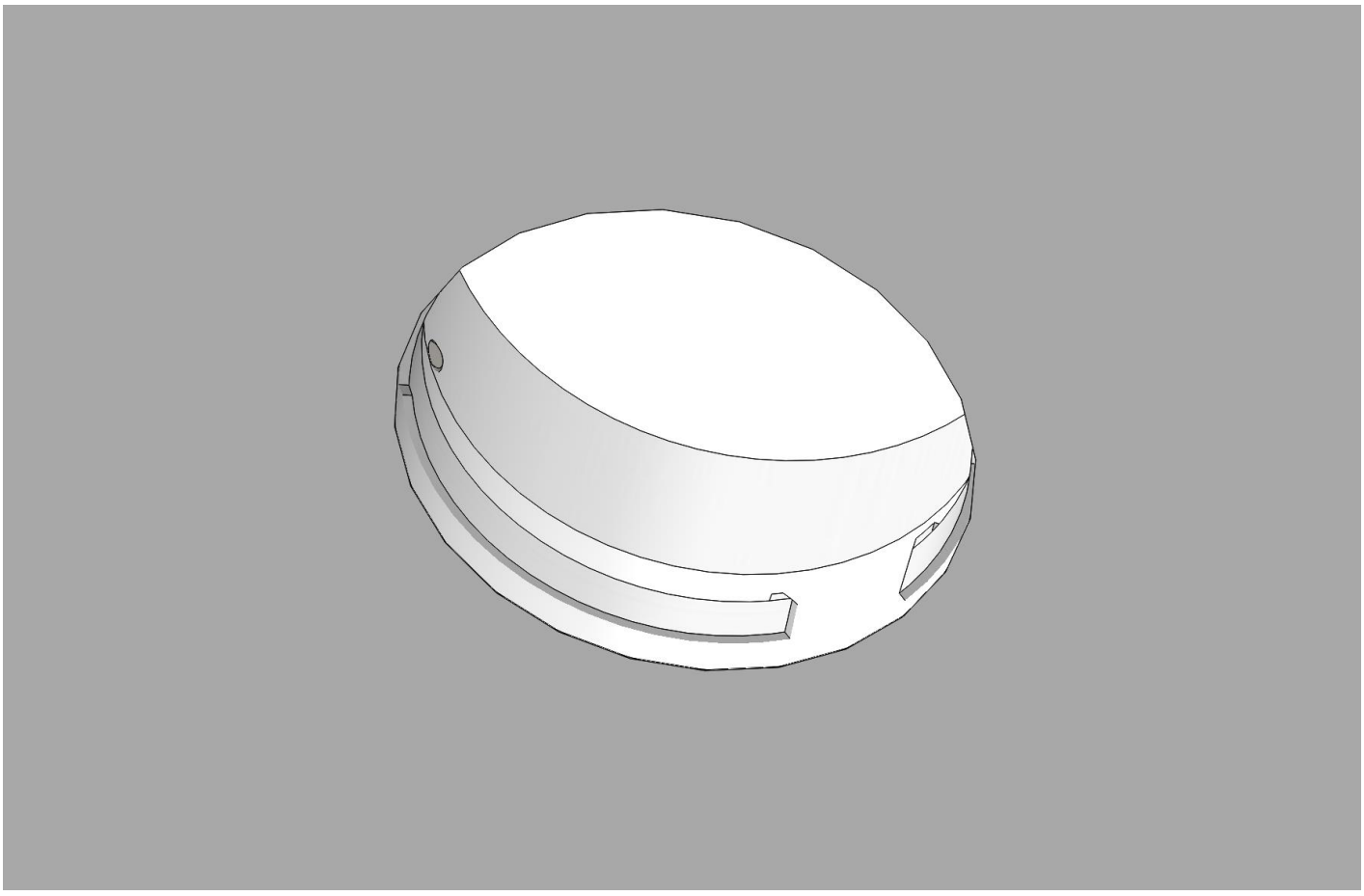

Step 7: Insert the driver through the housing and connect the fixture with driver with the help of quick connectors attached to the wires of driver and fixture.

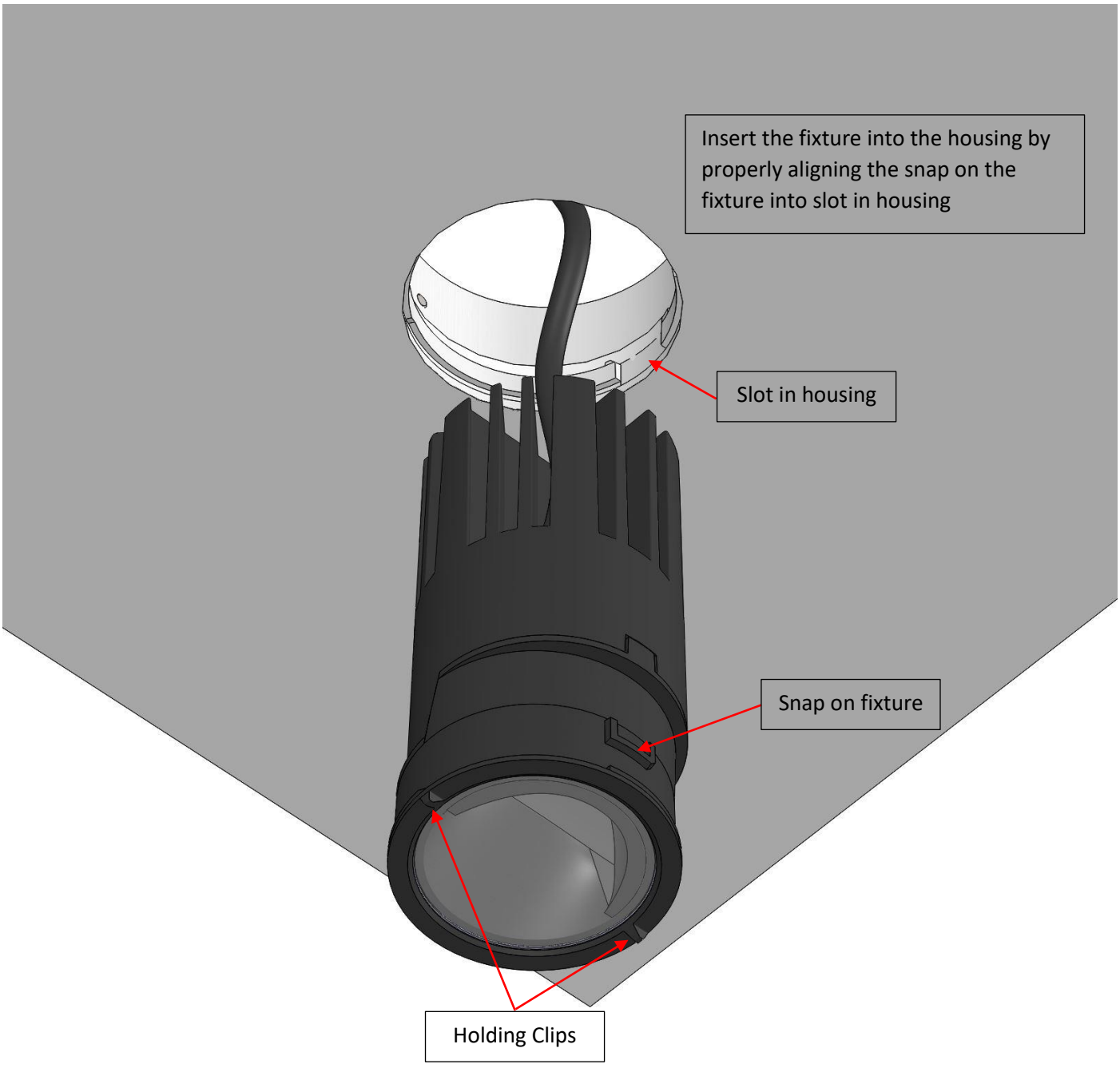

After passing through the rotate the fixture using the 2 holding clips given and lock the fixture.

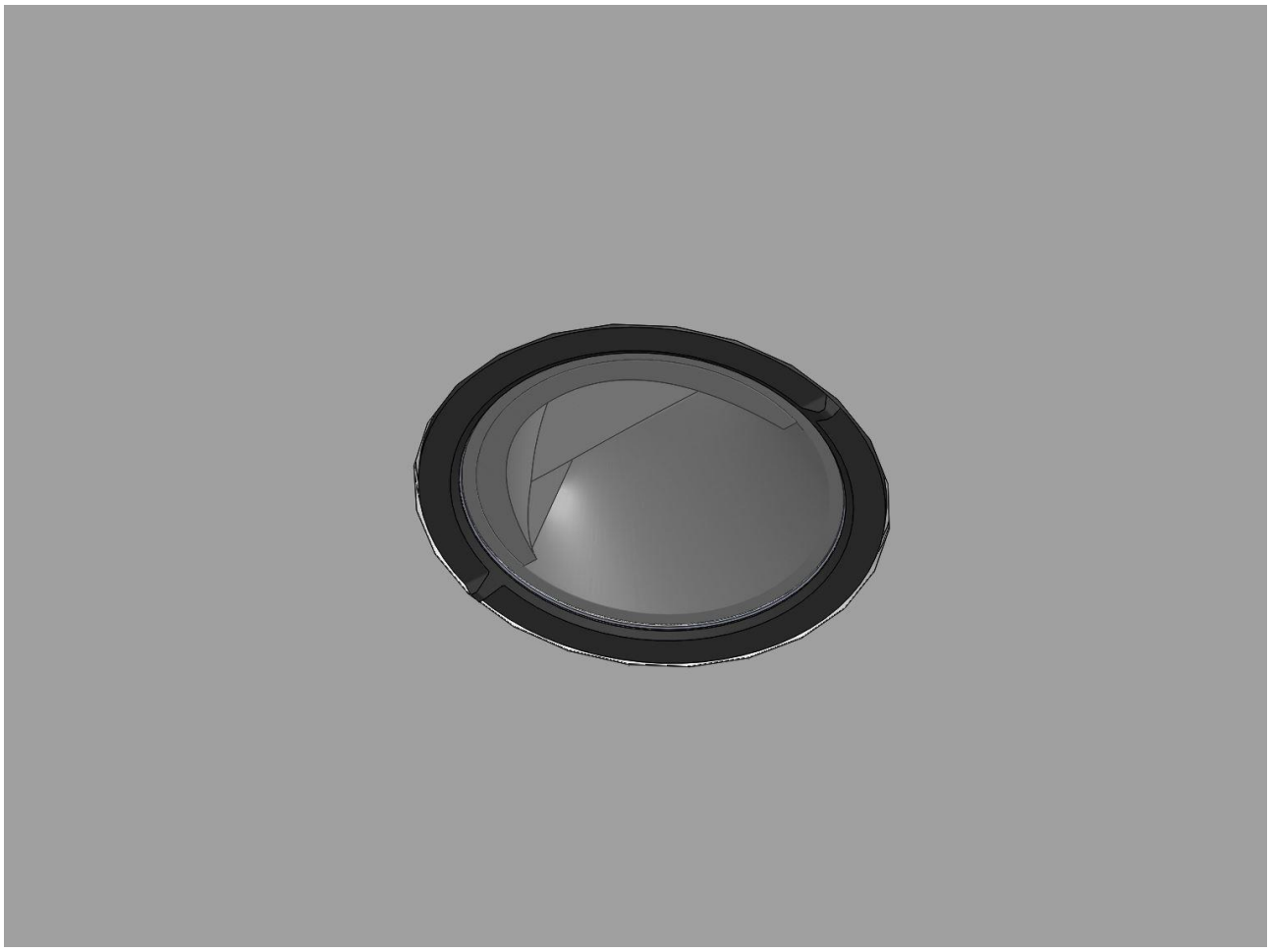

Installation is complete. Lights can be Turned On!

Additional Note: For purpose of maintenance remove the fixture by turning the plastic rim do not remove the housing. As shown in the figure.

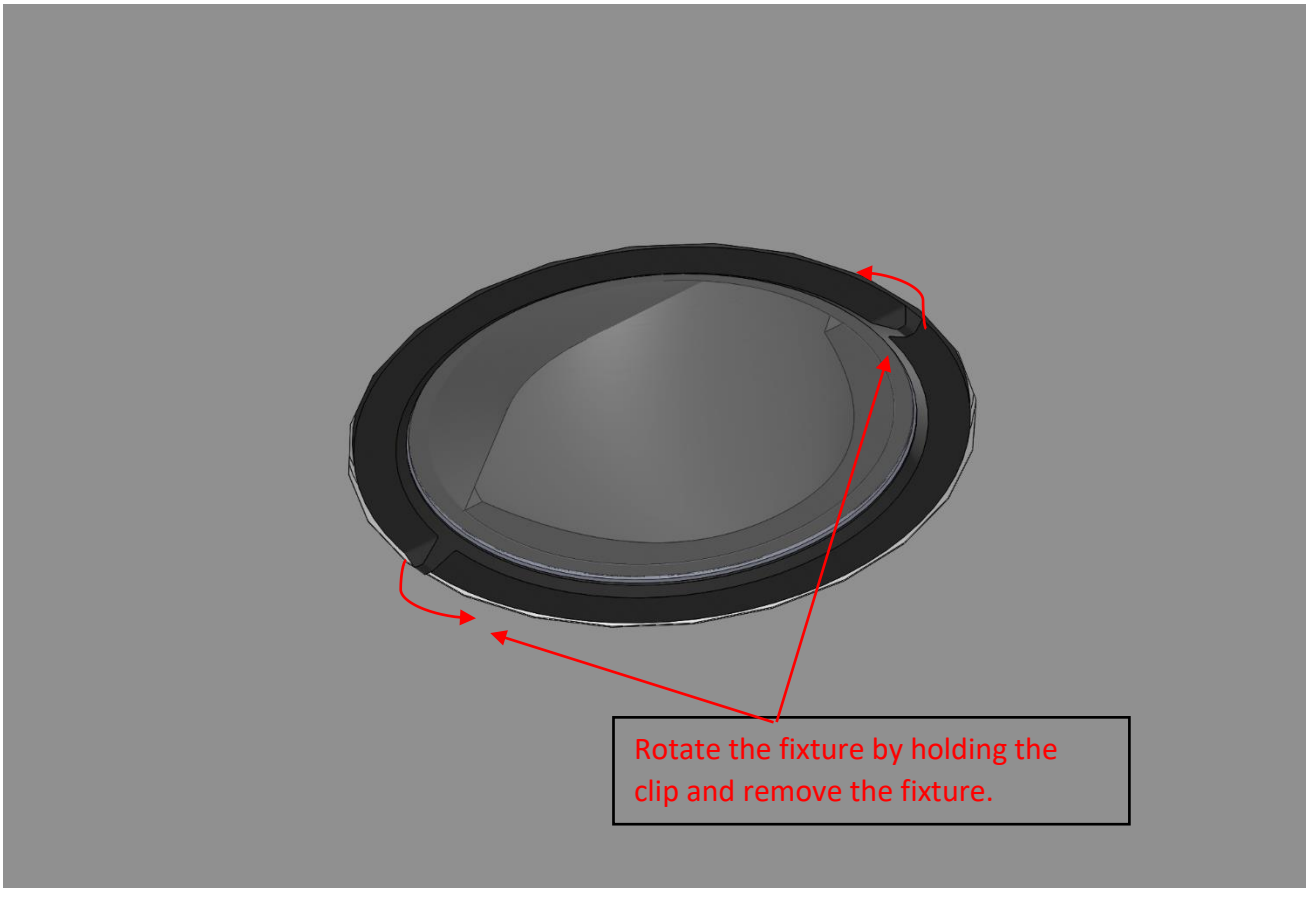



After maintenance work install back the fixture at its original position.

