Dolmen Floor Mounted INSTALLATION MANUAL

Step 1: Make Three Drill hole in concrete at M10 Anchor Bolt at 150 mm PCD (M10x50mm).

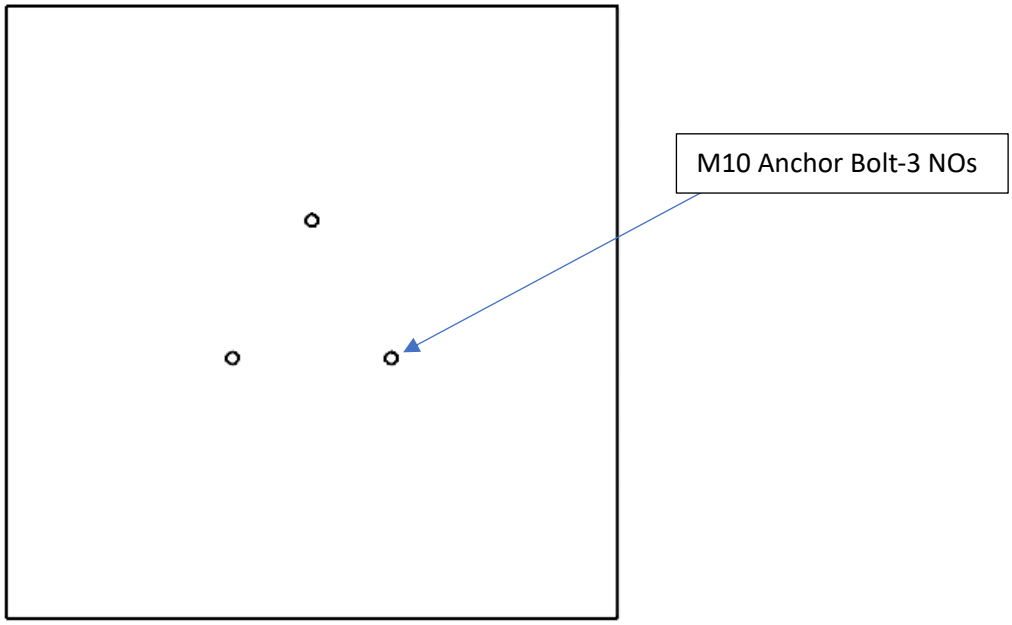

Step 2: Positioning the Floor Fixation ring on hole.

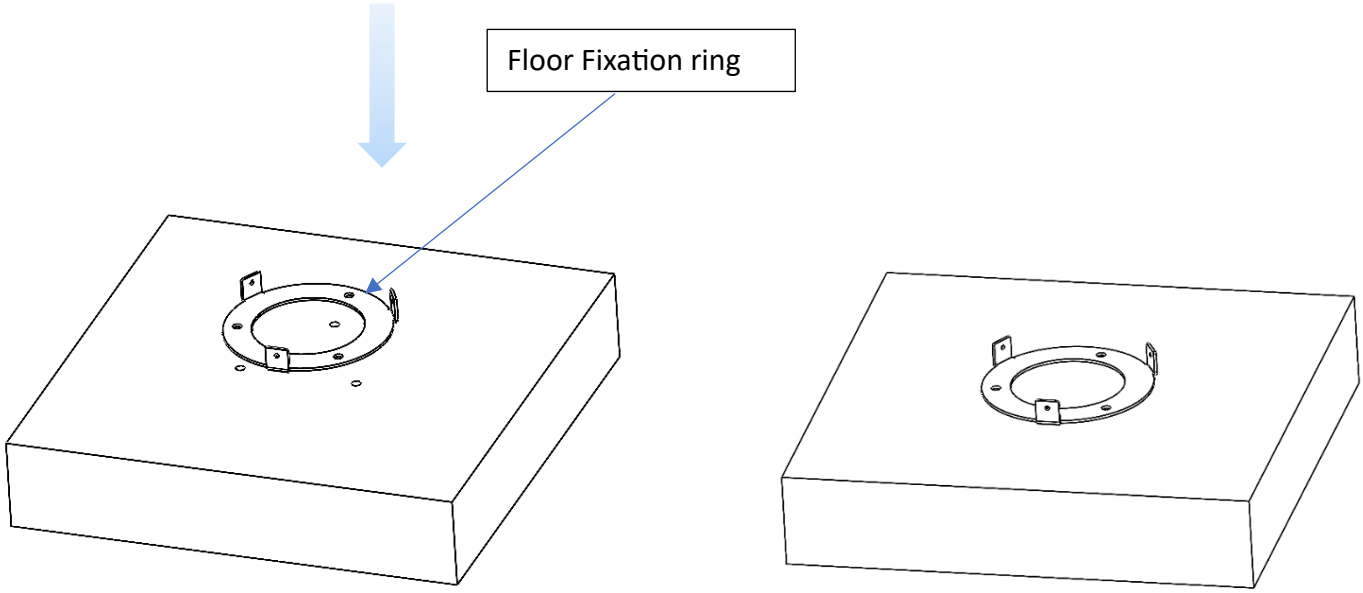

Step 3: Fix the Floor Fixation Ring with the help of M10 Anchor Bolt.

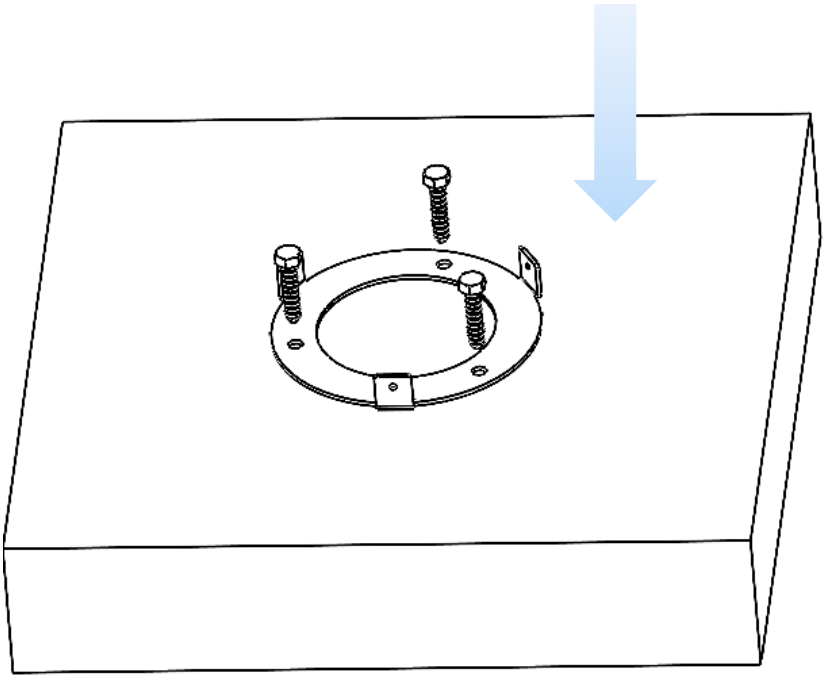

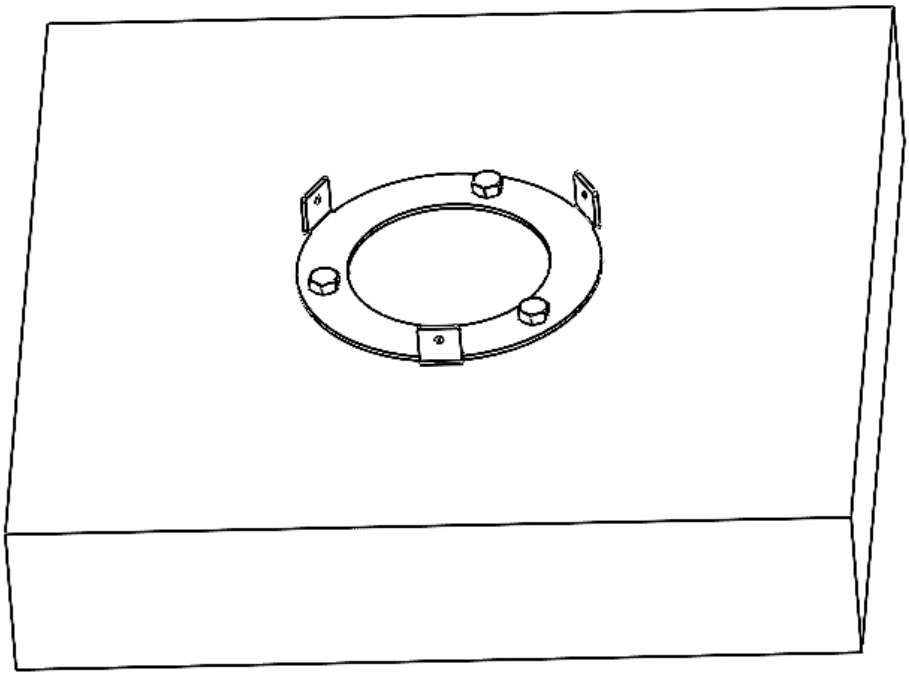

Step 4: Align the hole of Floor Mounting Round Ring & Floor Fixation Ring.

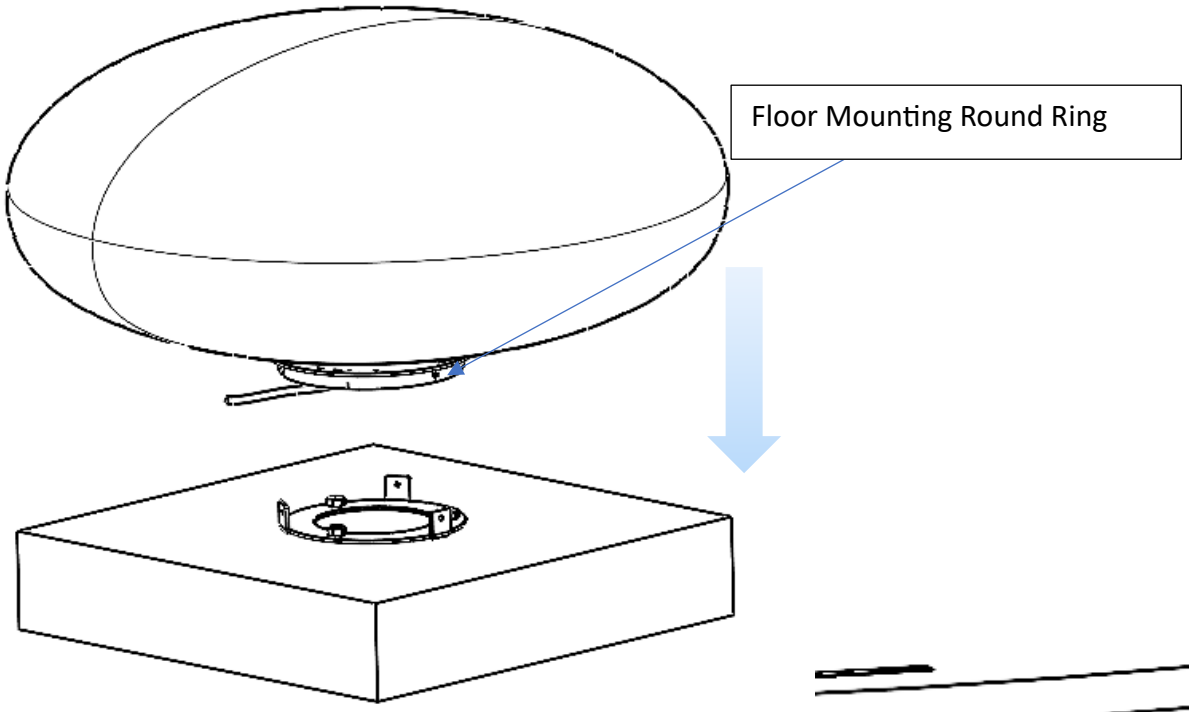

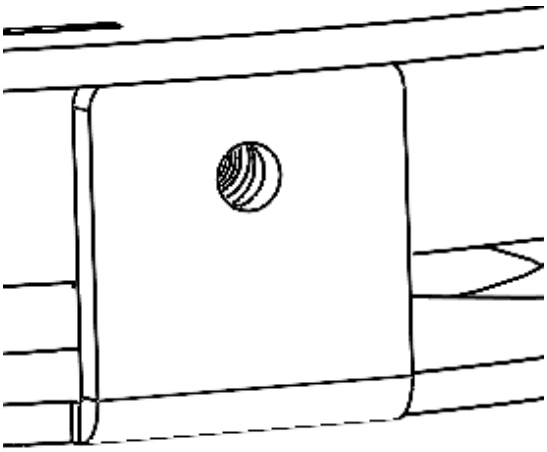

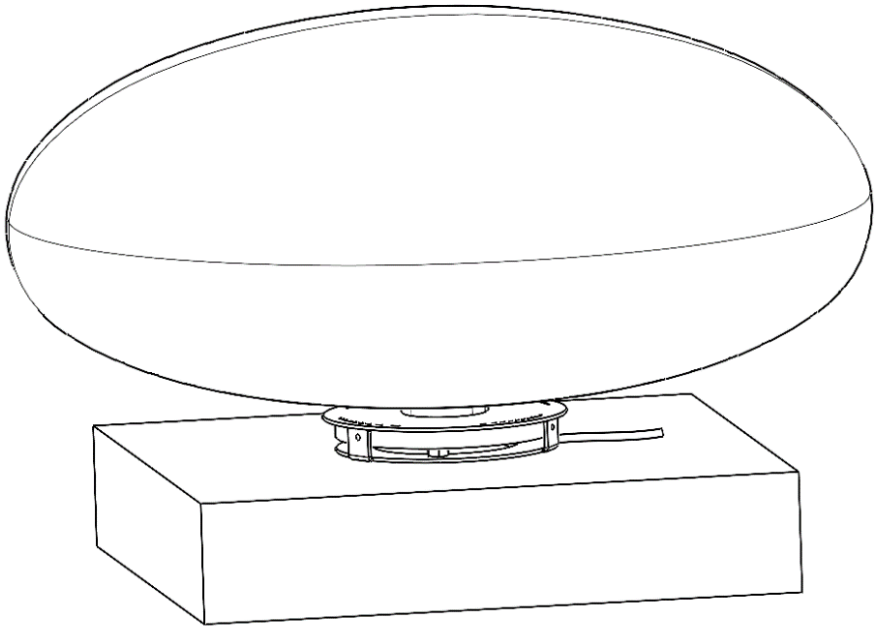

Step 5: M6 x 10mm Machine Screw Fix the fixture

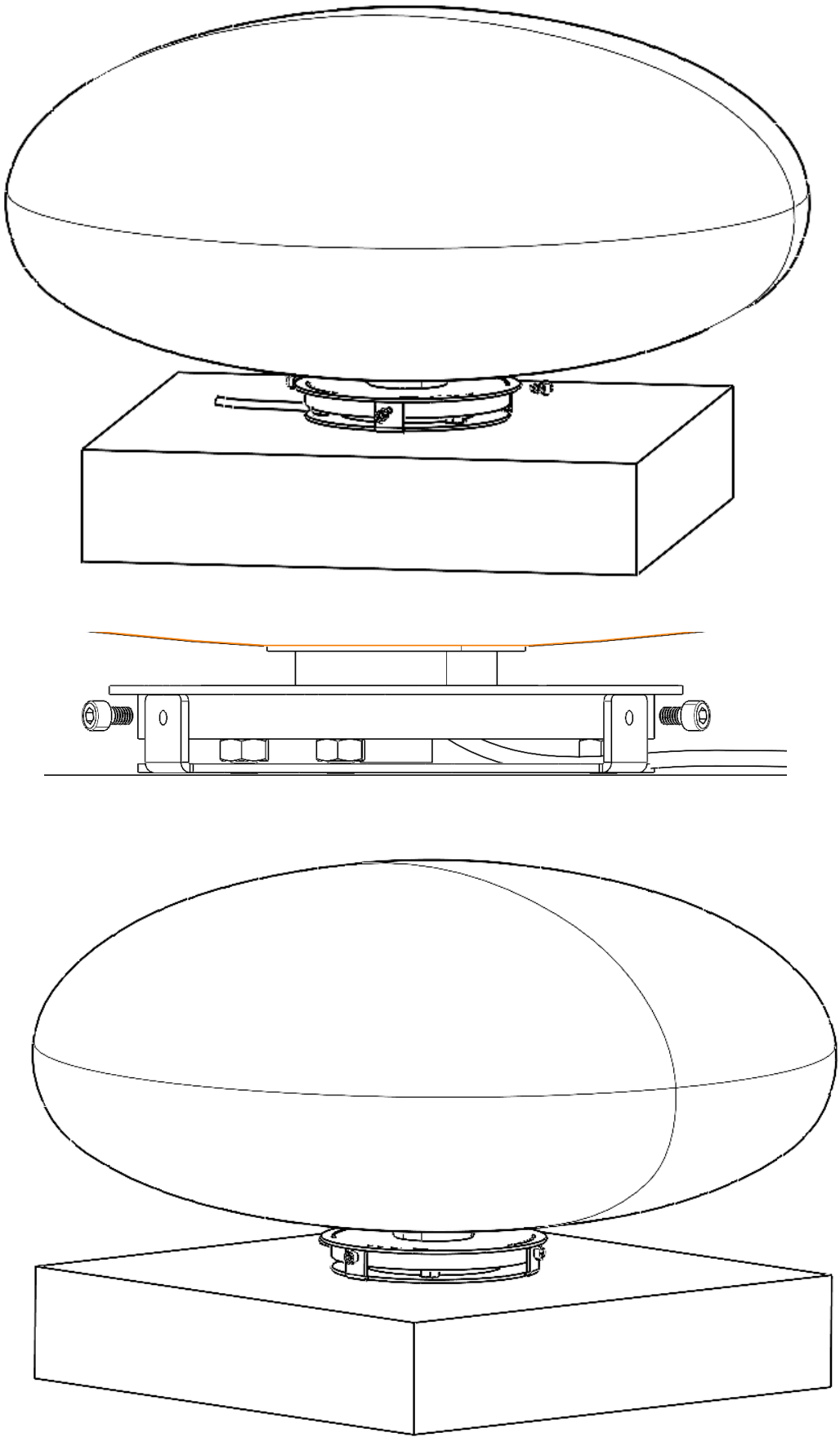

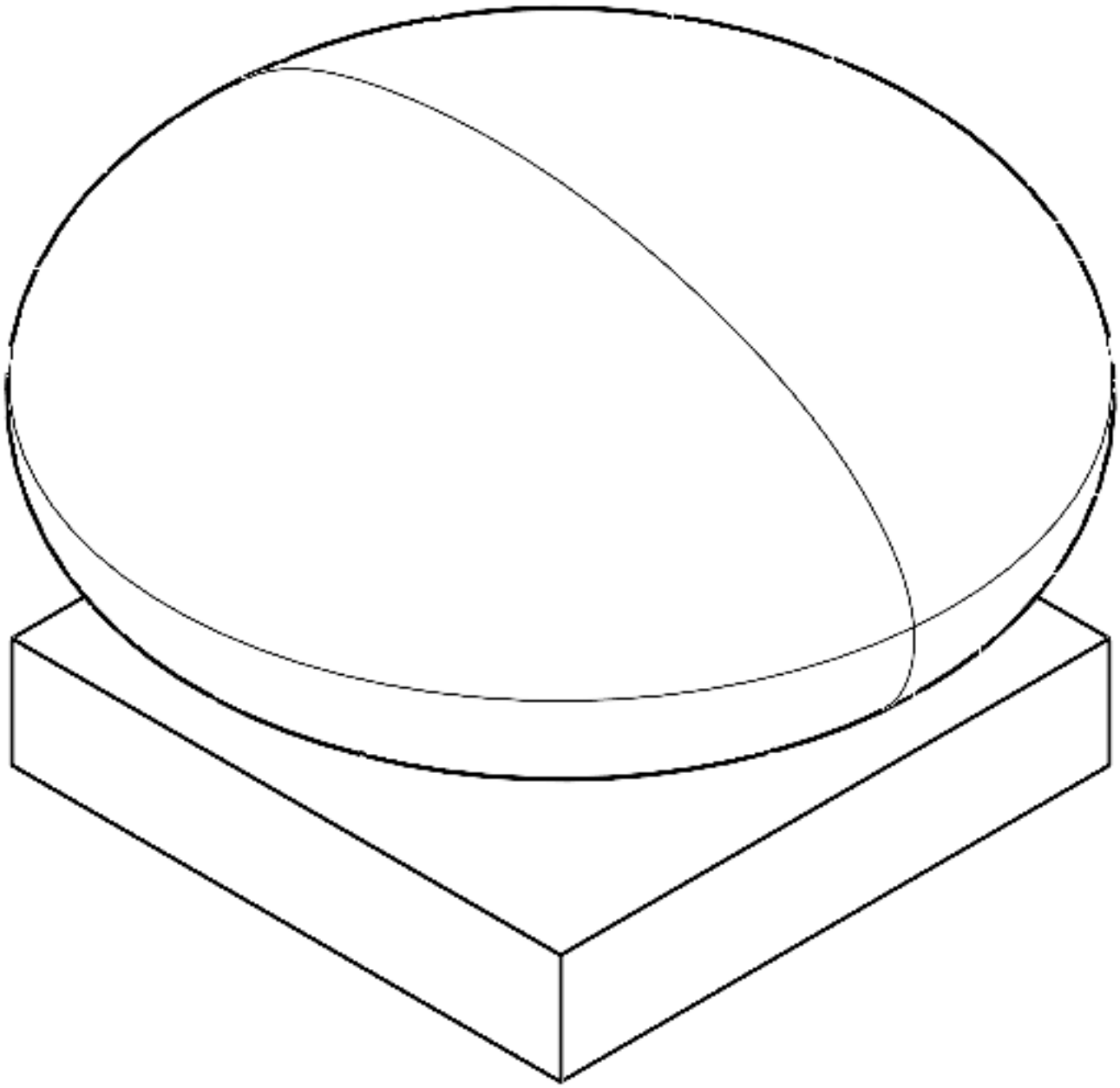

Installation completed. The lights can be turned on!