Zona Inline Perdu 6X Linear Recessed Installation Manual

Step 1: Make a cut out of 192mm x 41mm in the ceiling as shown in below figure.

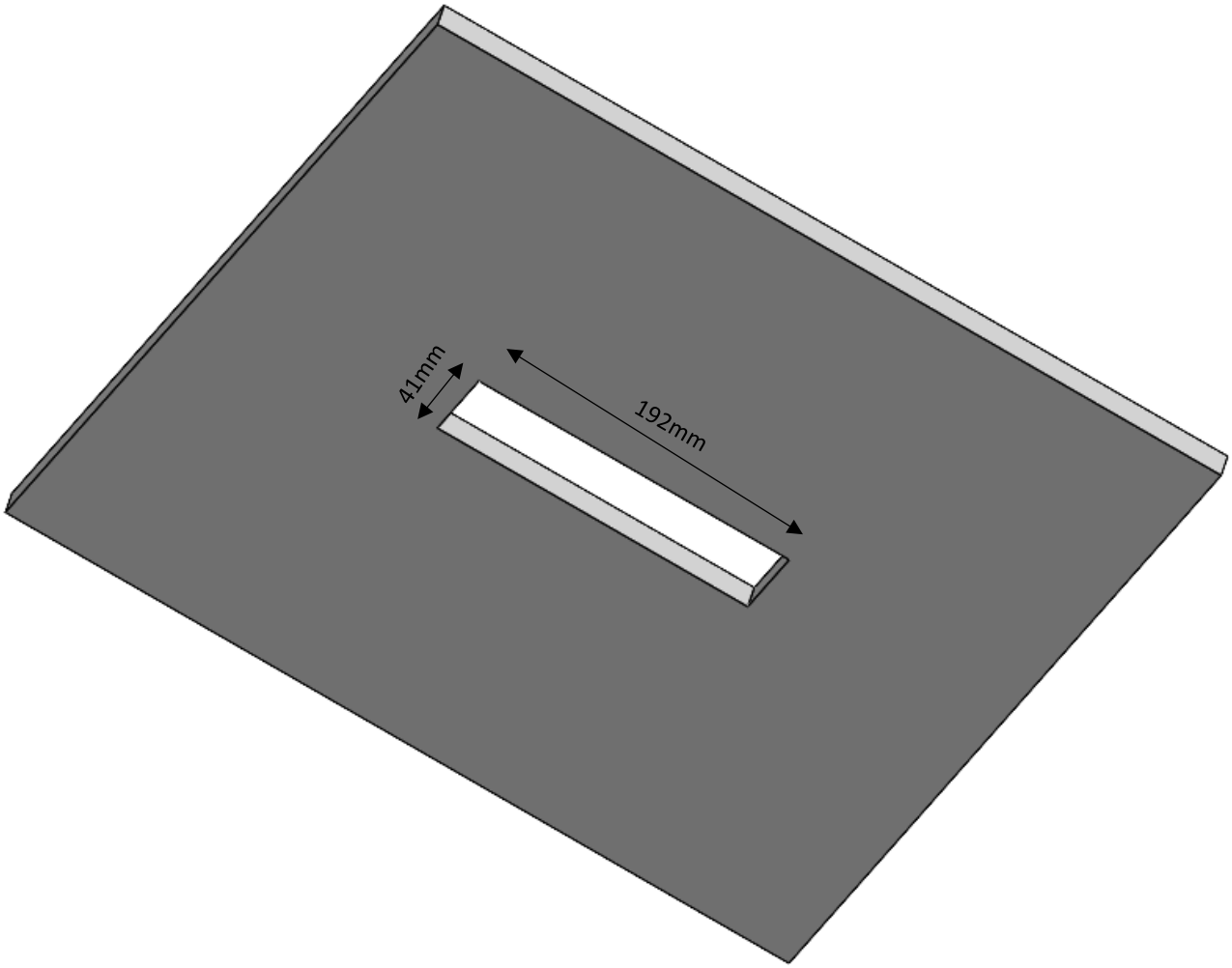

Step 2: Loose the toggle attached to the recessed frame and fix the recessed frame properly in the cut out made.

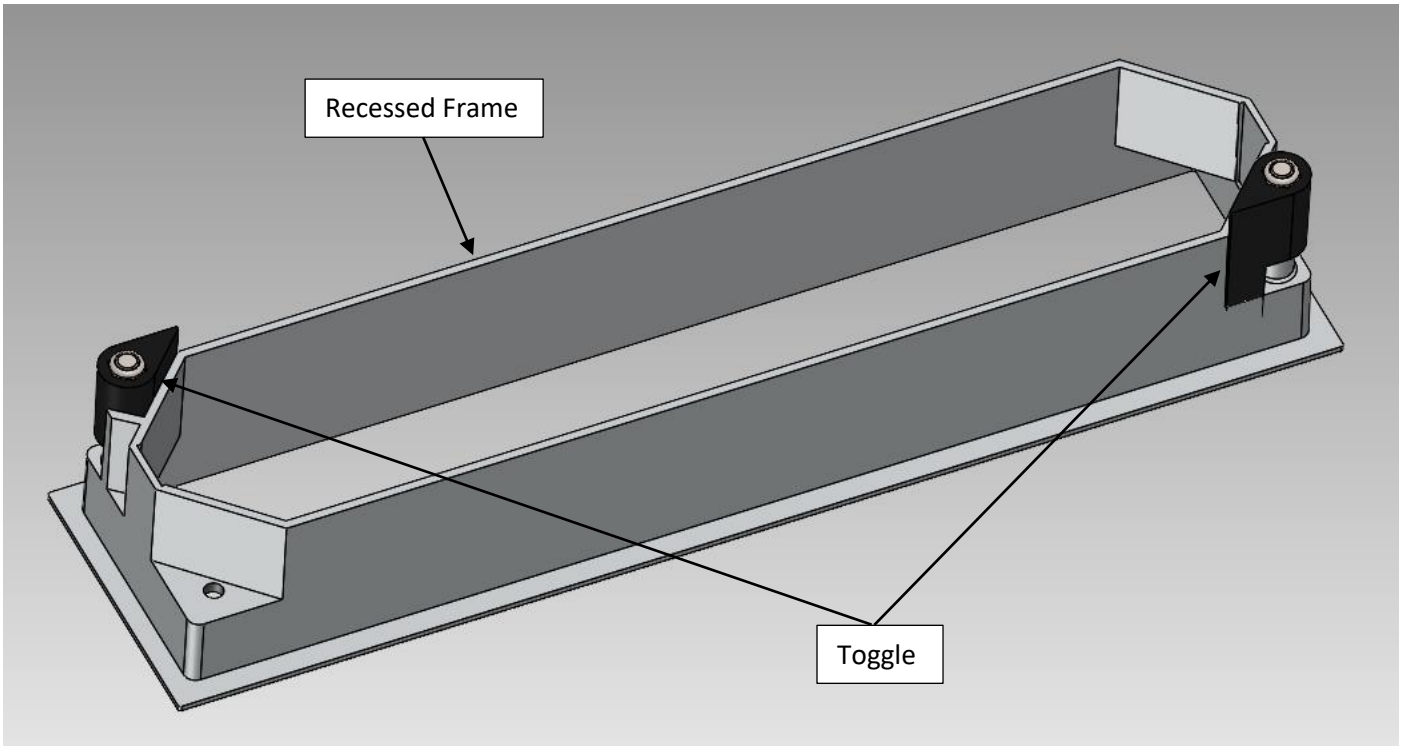

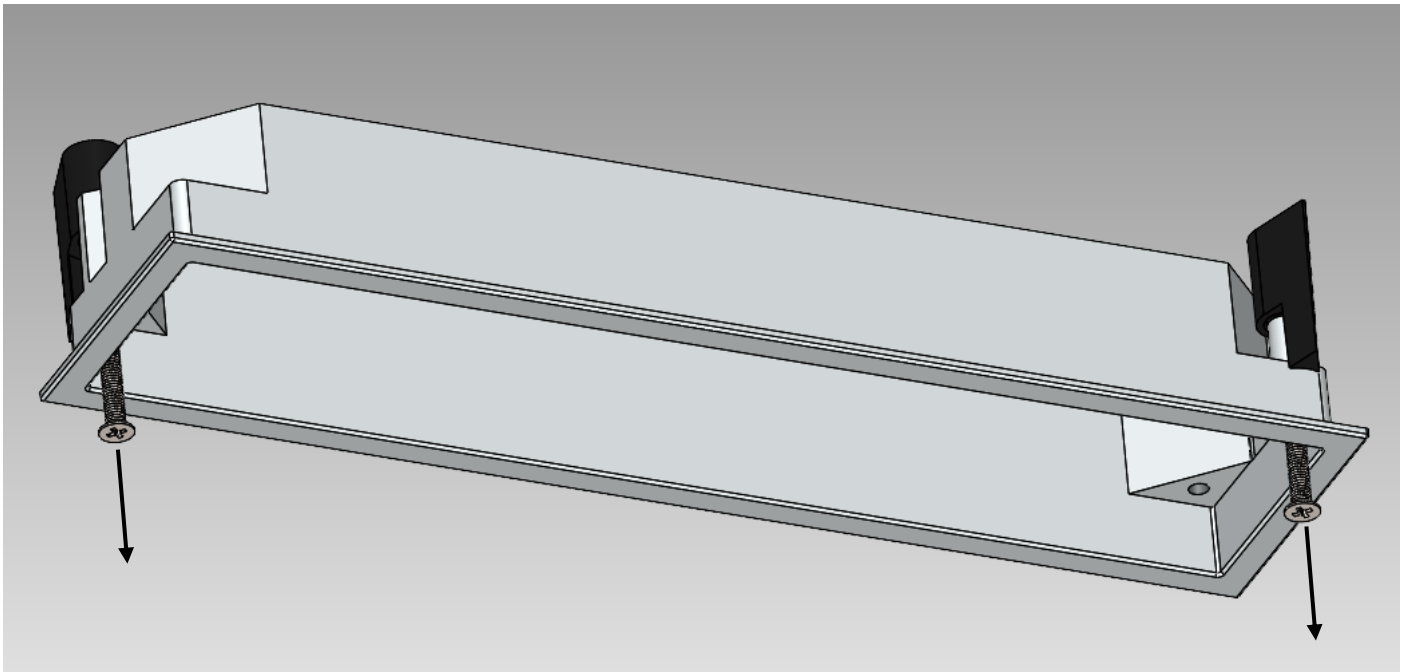

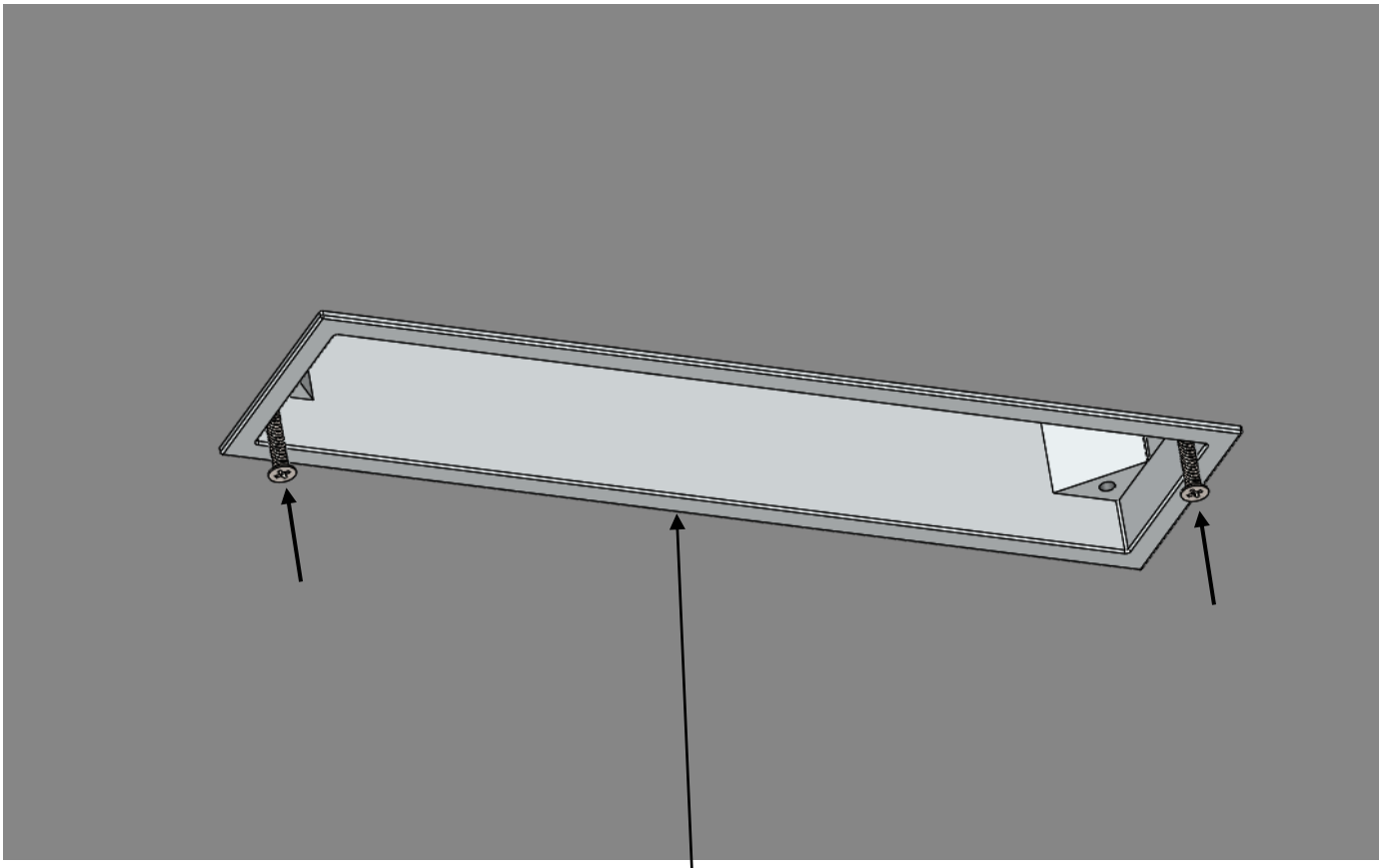

Make sure that recessed frame is fixed properly inside the cut out and tight the toggle screws

Step 3: Insert the driver through the recessed frame and connect the fixture with driver with the help of quick connectors attached to the wires of driver and fixture, then screw the fixture to recessed frame.

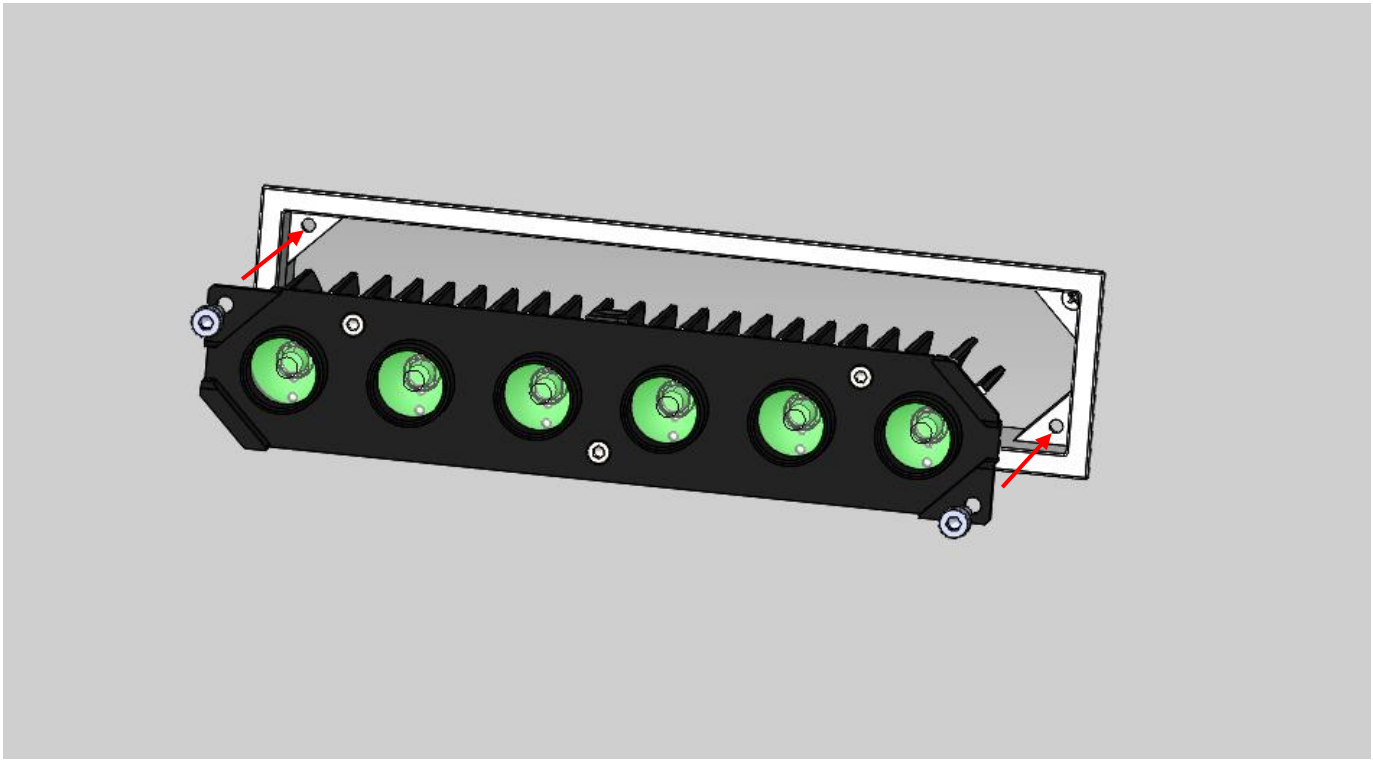

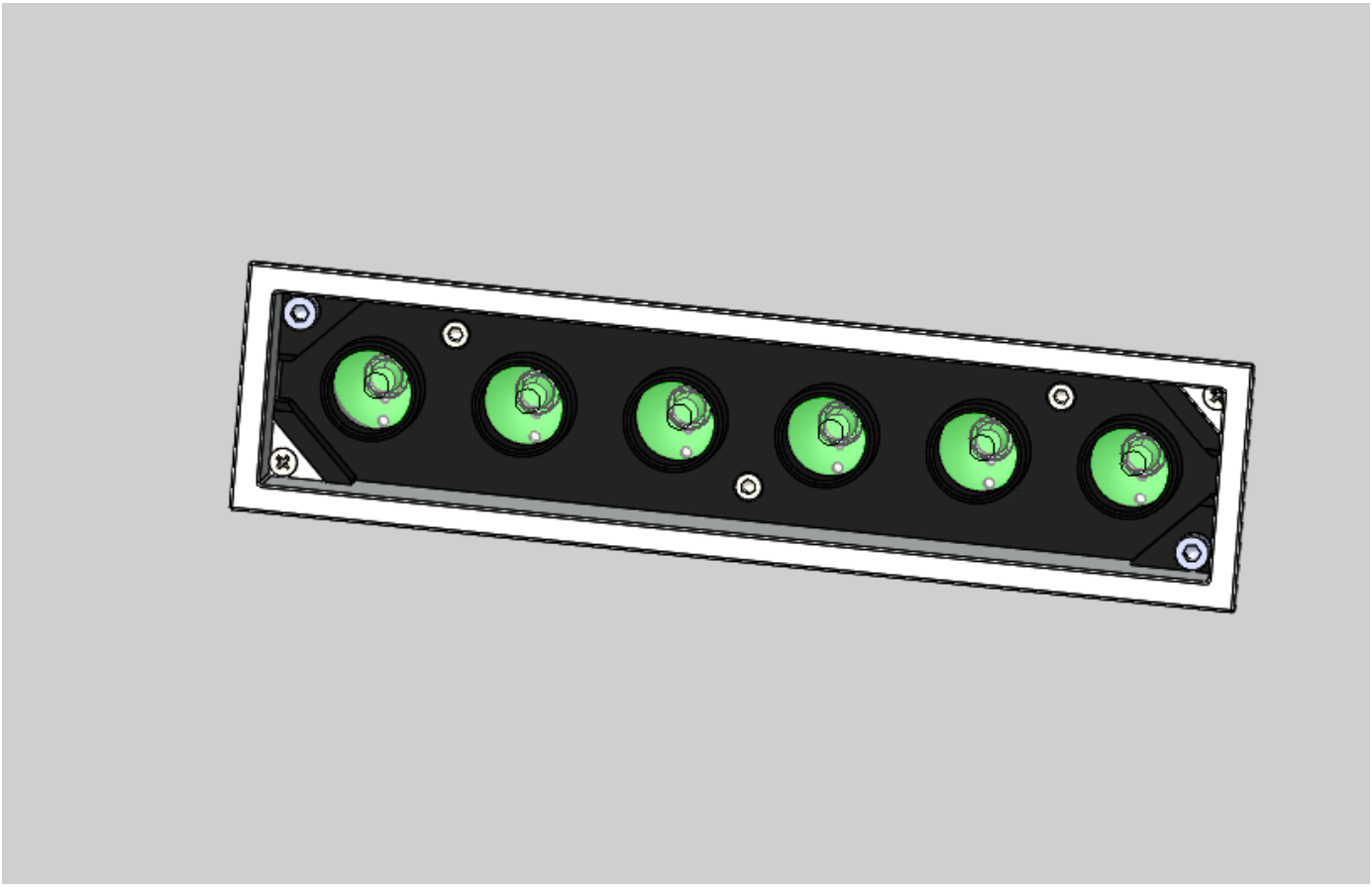

Step 4: Now fit the Zona Inline 6X Square Facia in the fixture which is made to be snap fit.

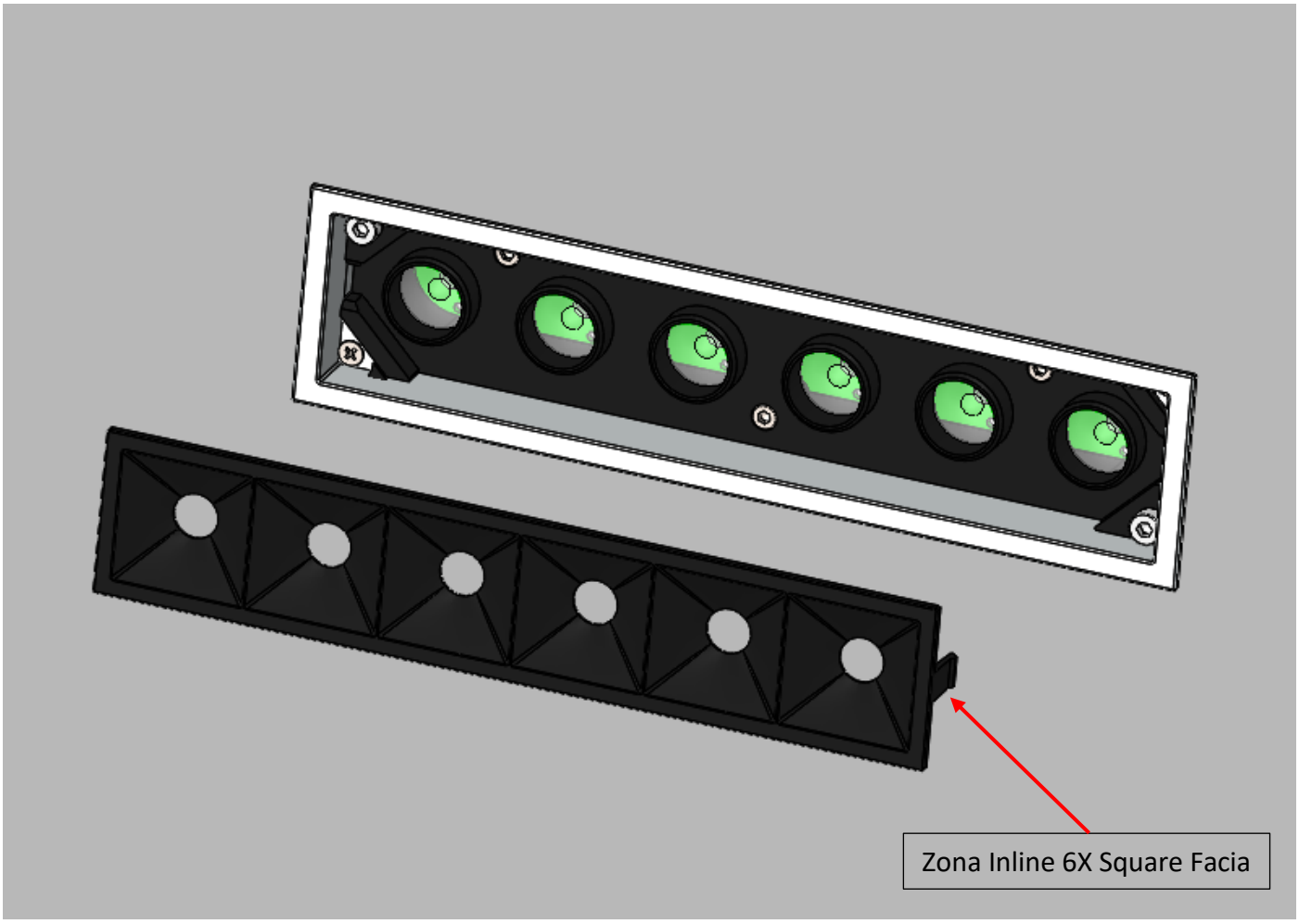

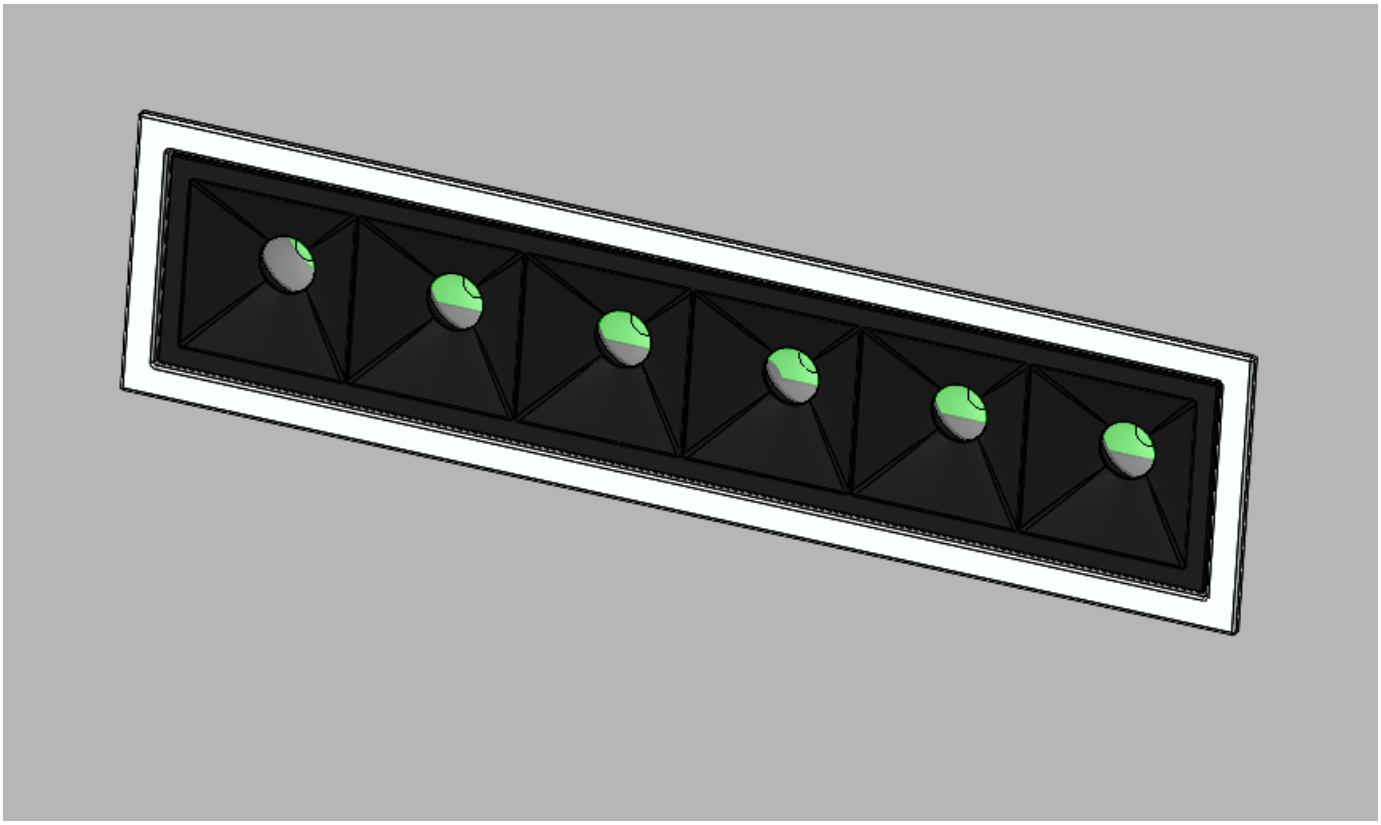

Installation is complete. Lights can be Turned On!