Nano One Flat Adjustable Trimless Installation Manual

Step 1: Make cutout in ceiling with hole saw cutter. The ceiling thickness should be 10 to 12 mm.

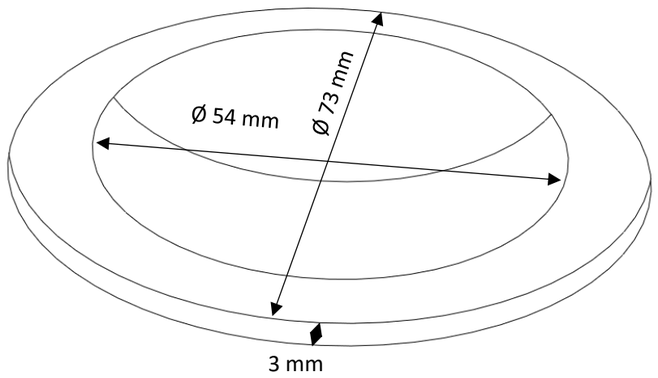

Step 2: Insert the trimless ring into the cutout and secure with a screw.

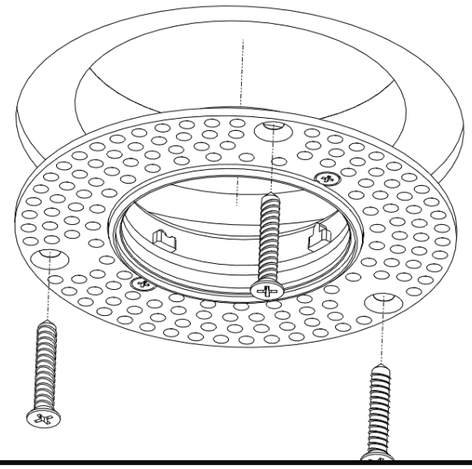

Step 3: Plaster over Joints.

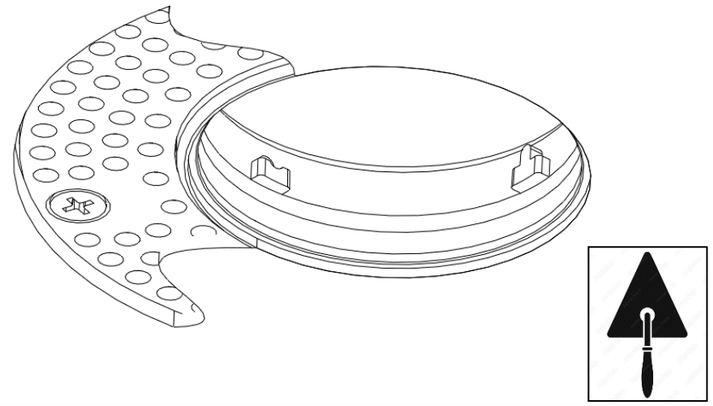

Step 4: Then ensure inside trimless ring clean.

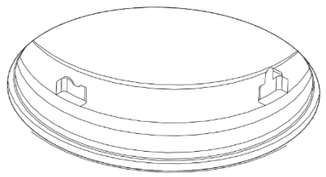



Step 5: Carry out painting.

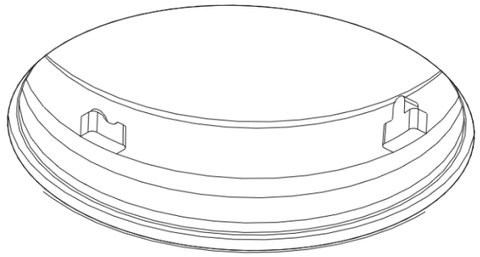

Step 6: Take out main supply cable through cutout.

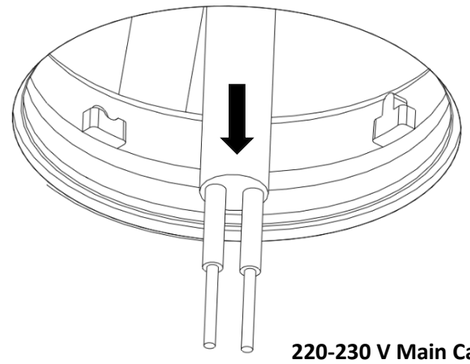

220-230 V Main Cable

Step 7: Connect the main supply cable to the driver.

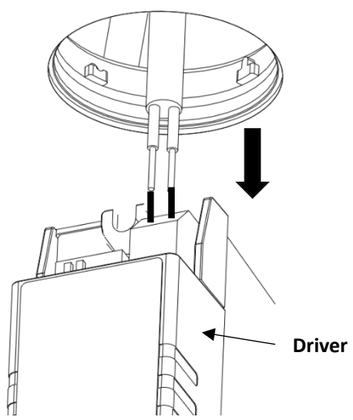

Step 8: Connect the fixture to the driver with the help of a quick connector.

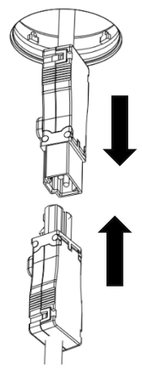

Step 9: Insert the fixture into the trimless ring

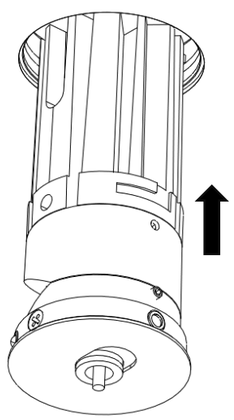

Date: 20.12.2025/ Rev:00

Step 10: Installation completed.

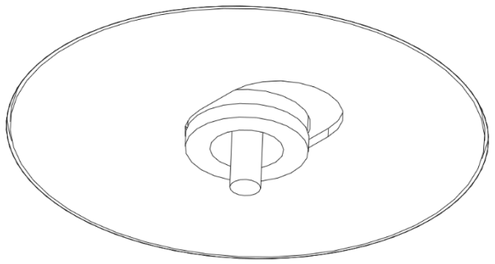

Step 11: Hold the fixture and remove the security plug from the fixture.

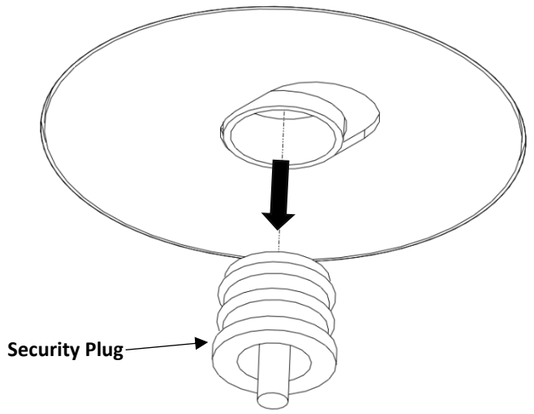



Step 12: For the adjustable, insert the tool into the cap. Adjust the fixture

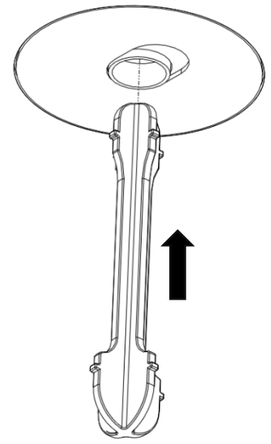

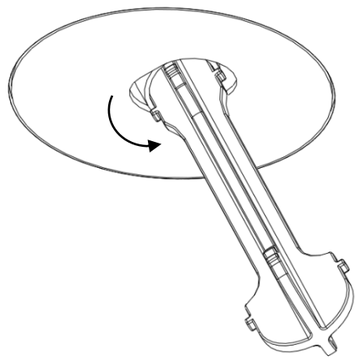

Step 13: For rotation, use a finger

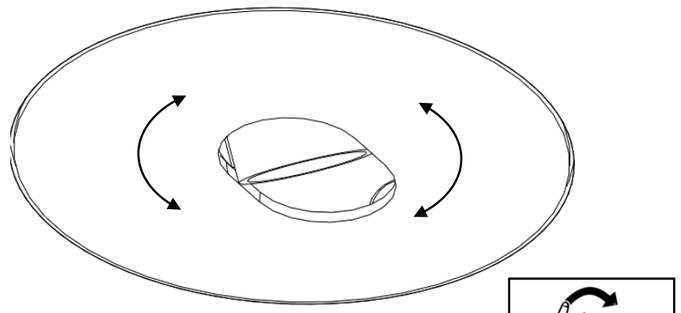

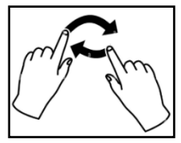

Maintenance Instruction

Step 14: Insert the security plug into cap.

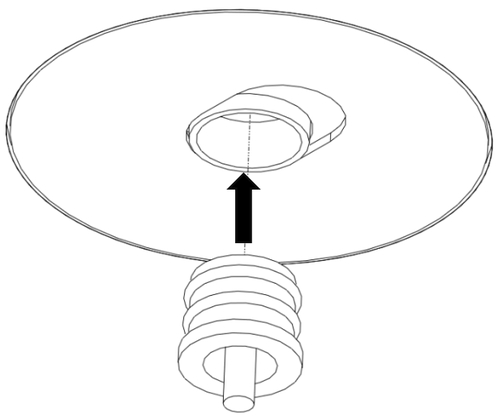

Step 15: Then pull the engine from the ring. If maintenance is done, then insert the engine into the ring.

