Zona Perdu Round 6X Trimless Installation Manual

Step 1: Make a cut out of Ø109mm in the ceiling as shown in below figure.

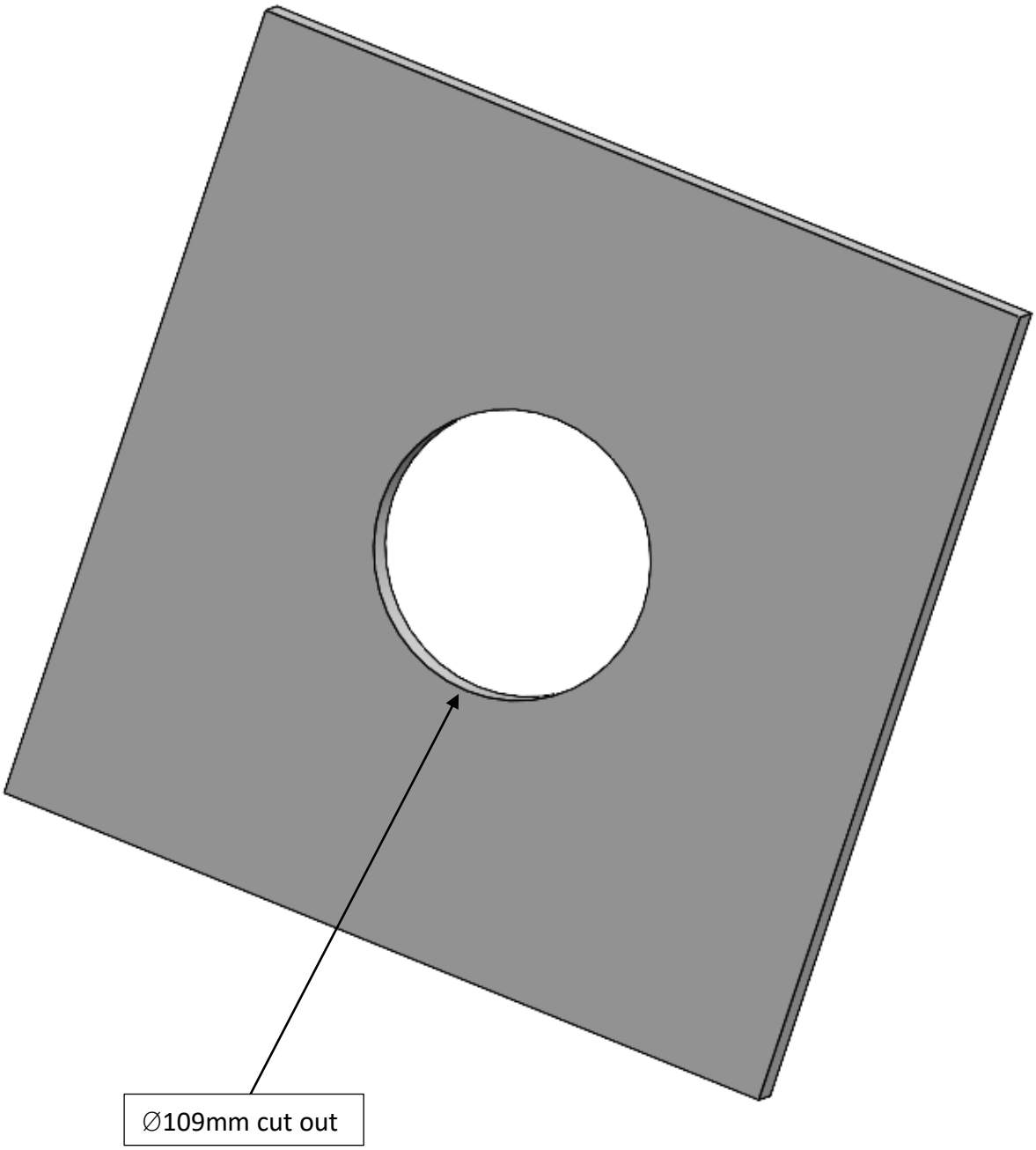

Step 2: Attach the trimless sheet to trimless frame with the help of screws as shown in below figure.

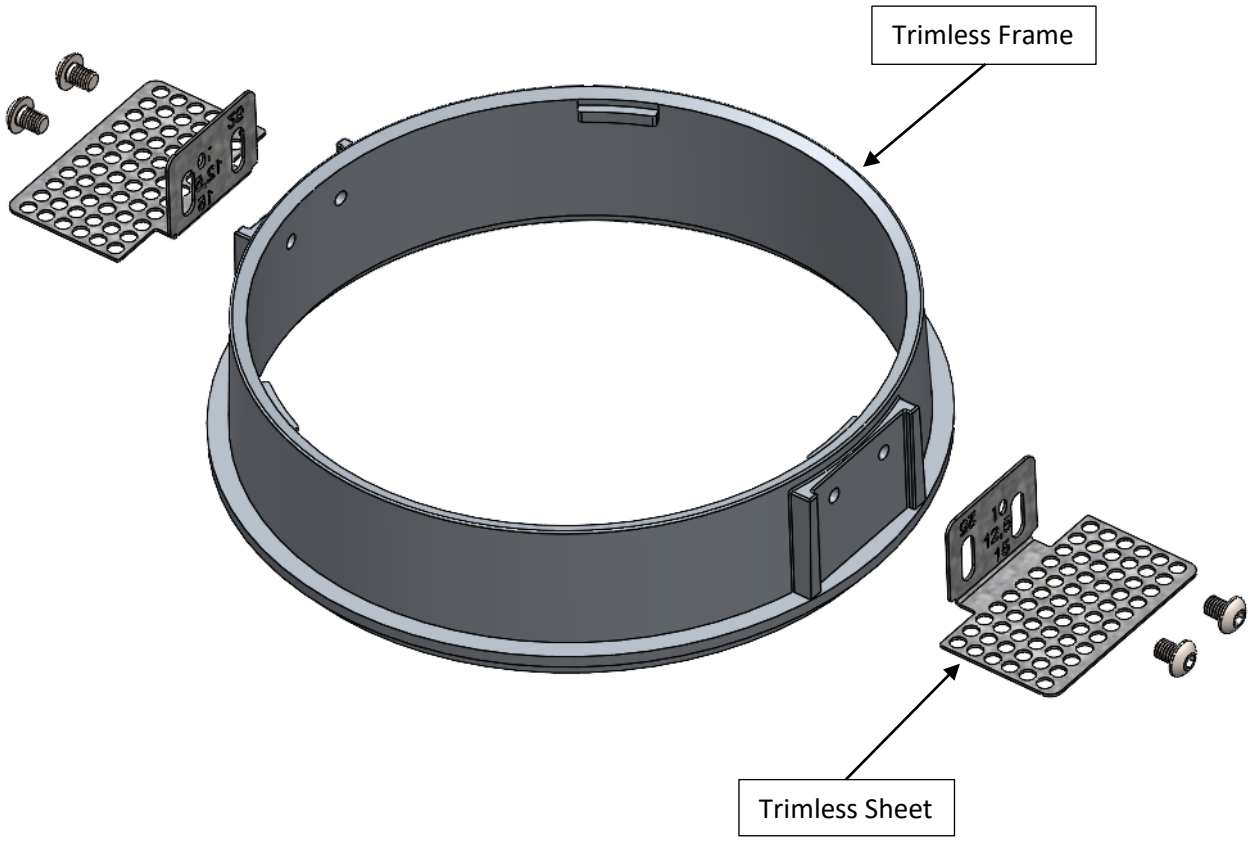

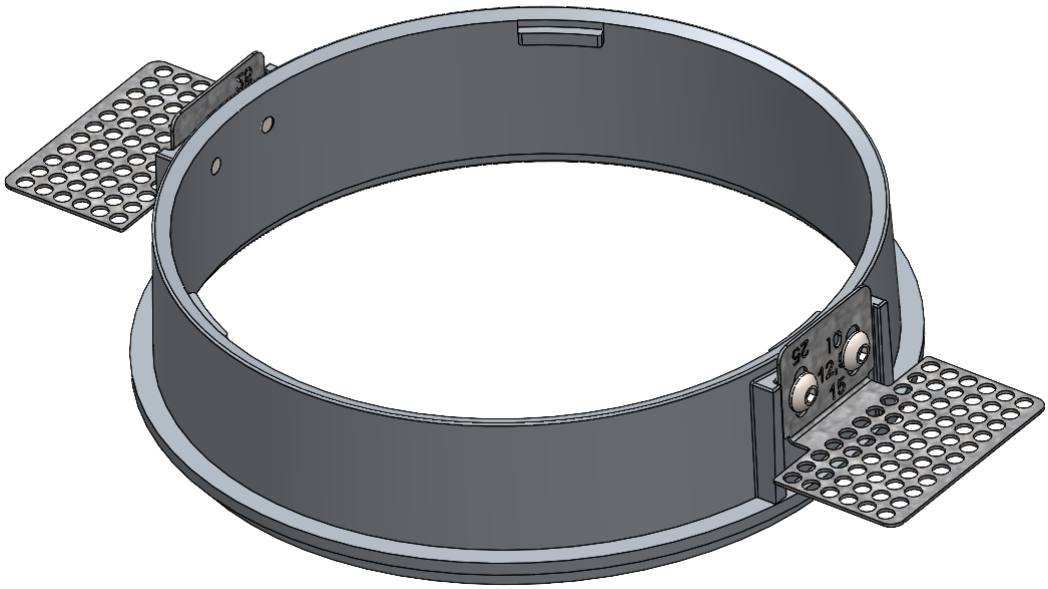

Step 3: Insert the trimless frame attached with trimless sheet in cut out by tilting such that the base of trimless frame should be at the same level as the POP.

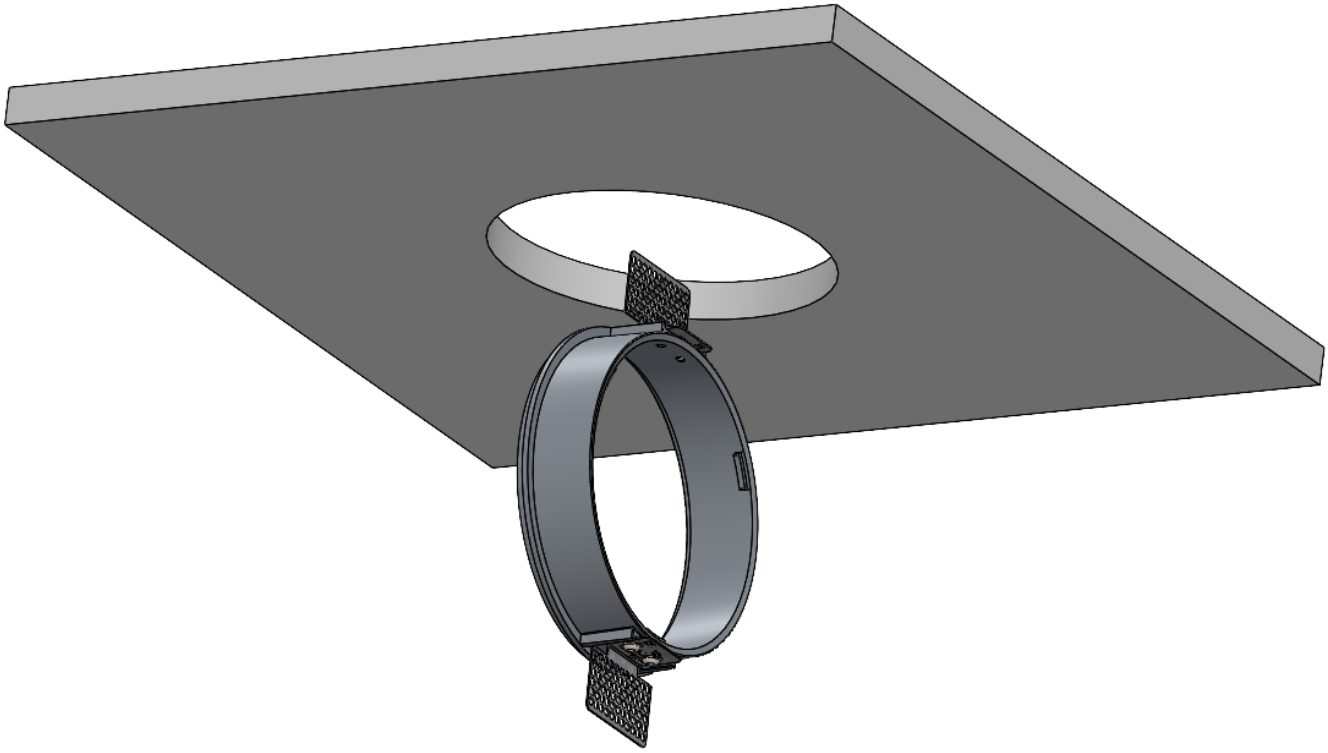

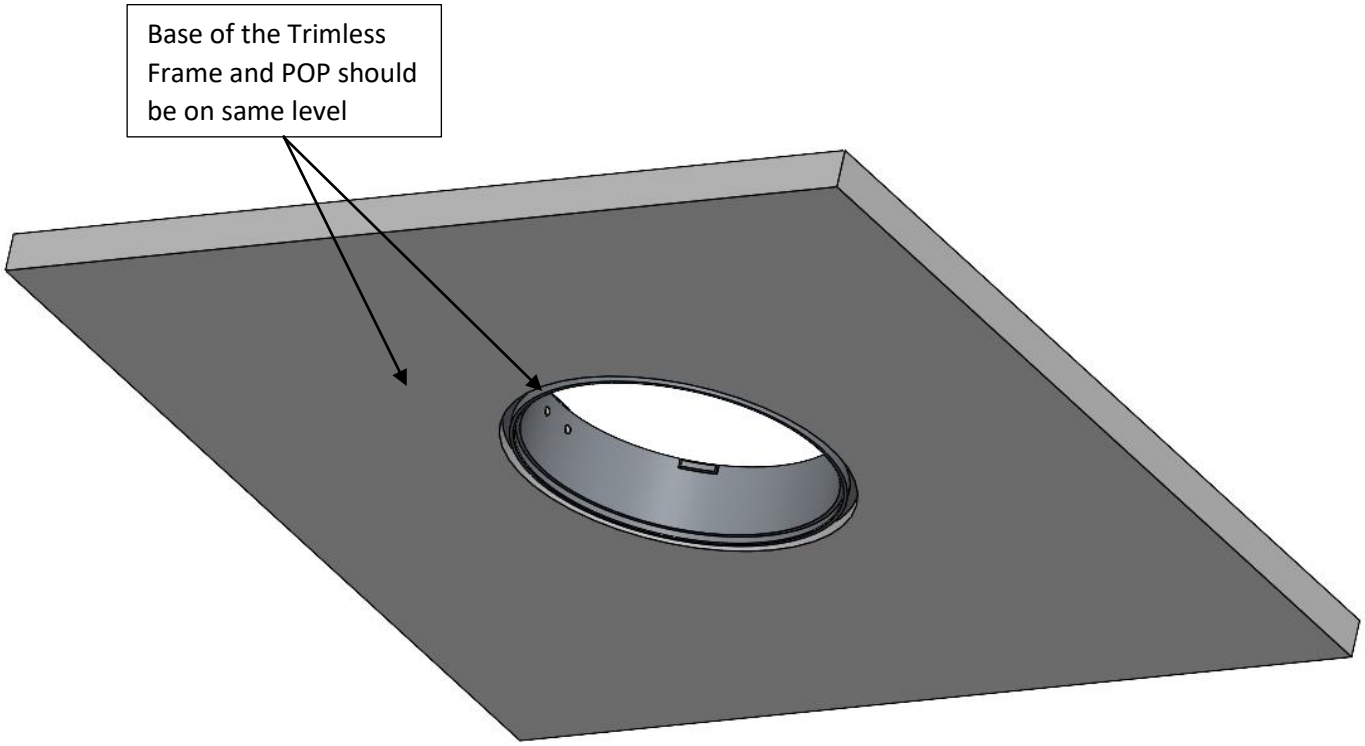

Step 4: Screw the POP ceiling to the trimless sheet to fix the trimless frame.

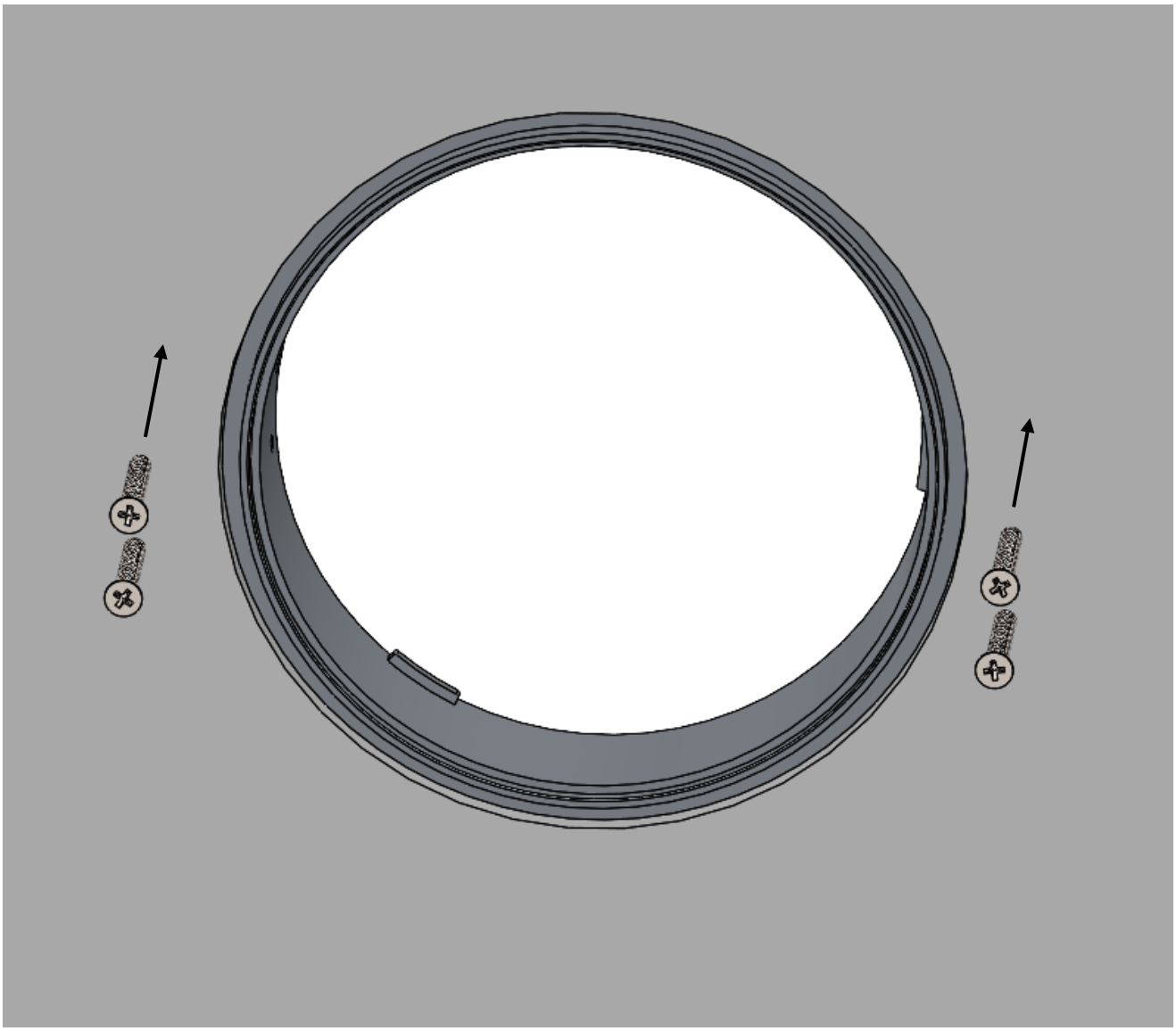

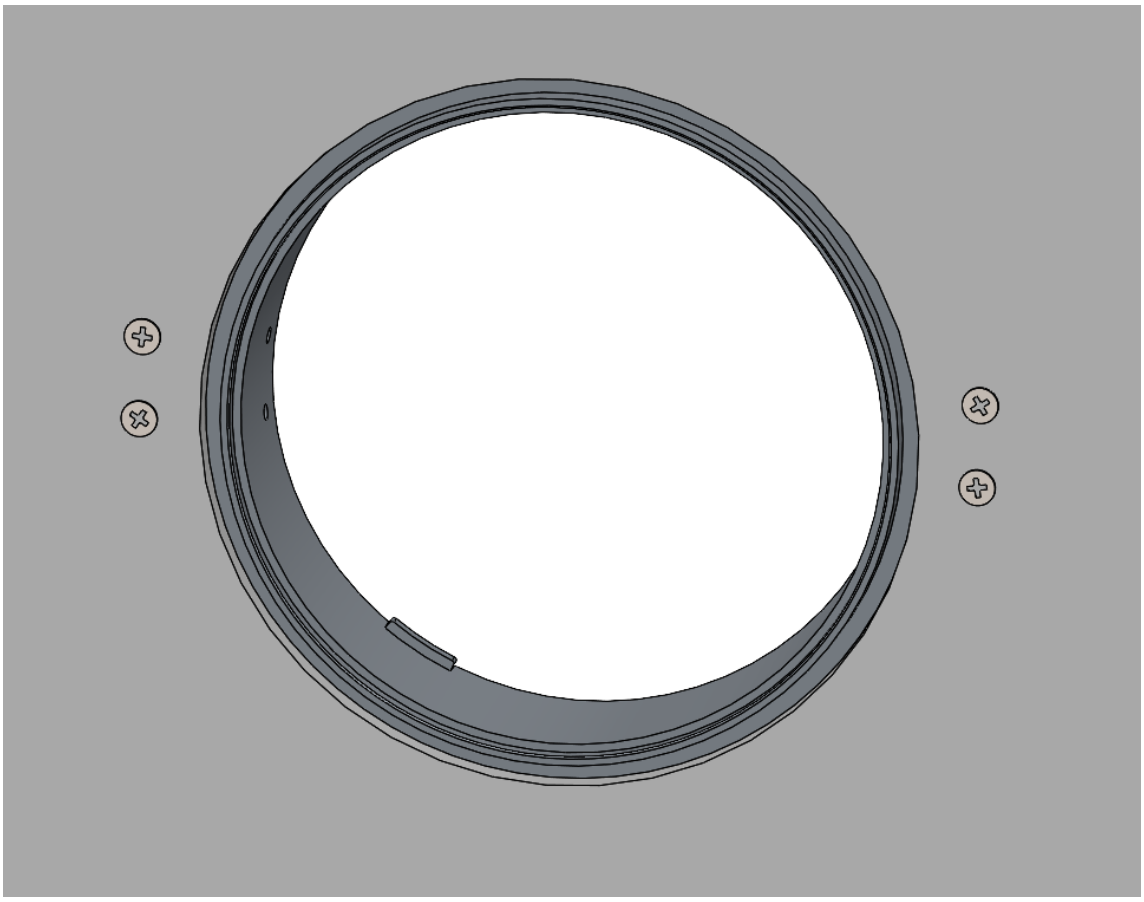

Front View

Screws holding Trimless Frame to the POP ceiling

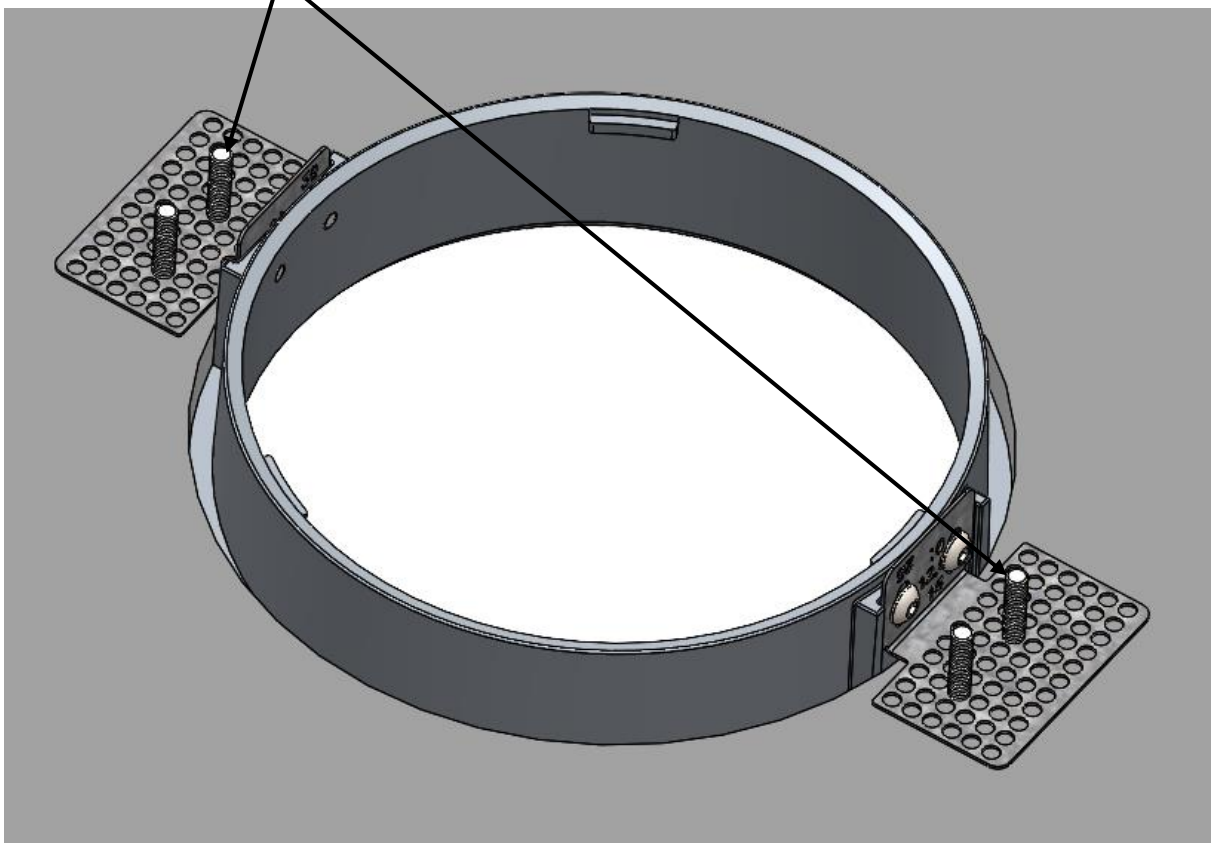

Rear View

Step 5: Finish the POP ceiling with Putti/POP. Fill the portion shown in sky blue colour with putti and make sure putti doesn't goes into the inner side of trimless frame.

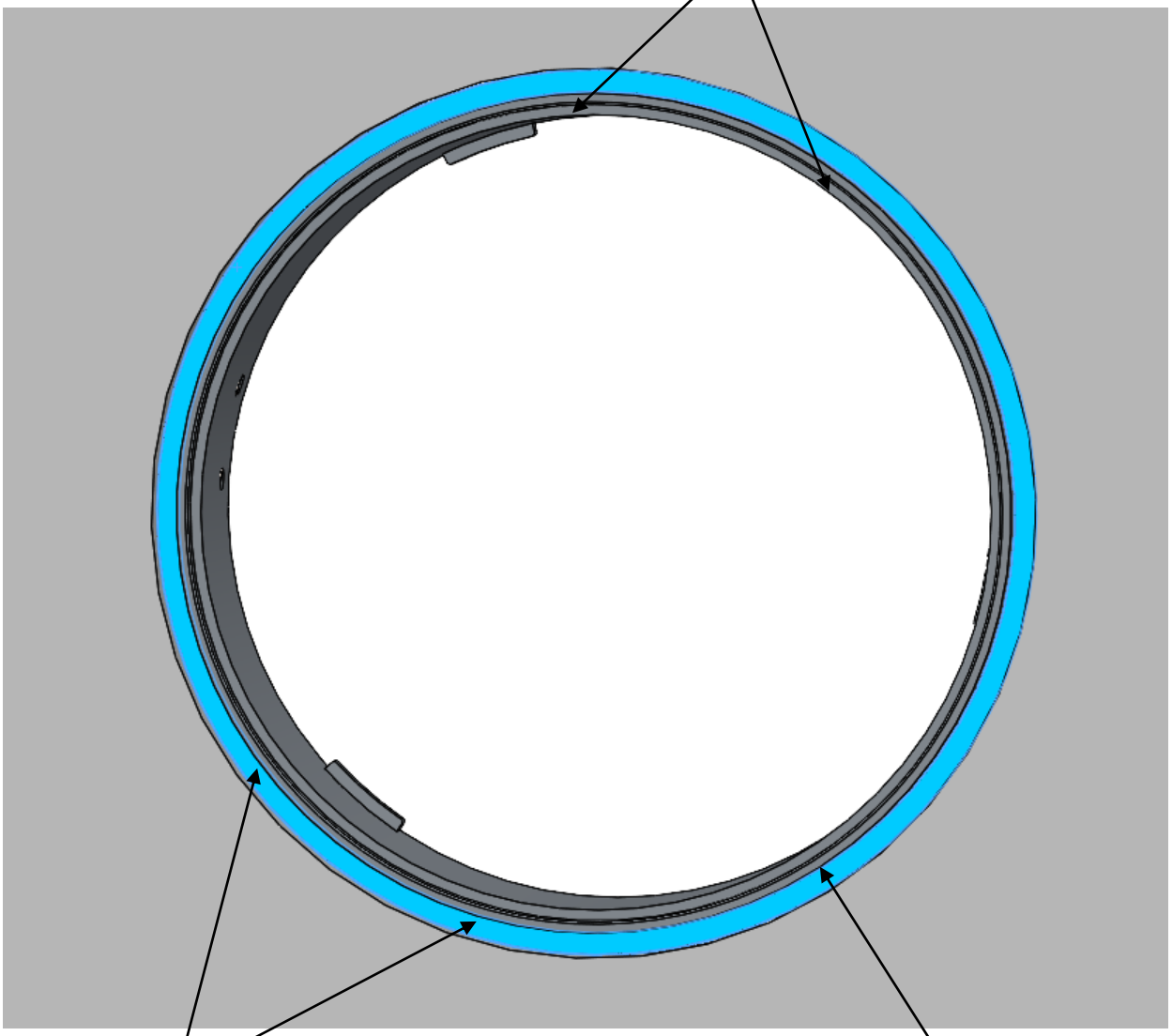

Step 6: Let the putti dry properly.

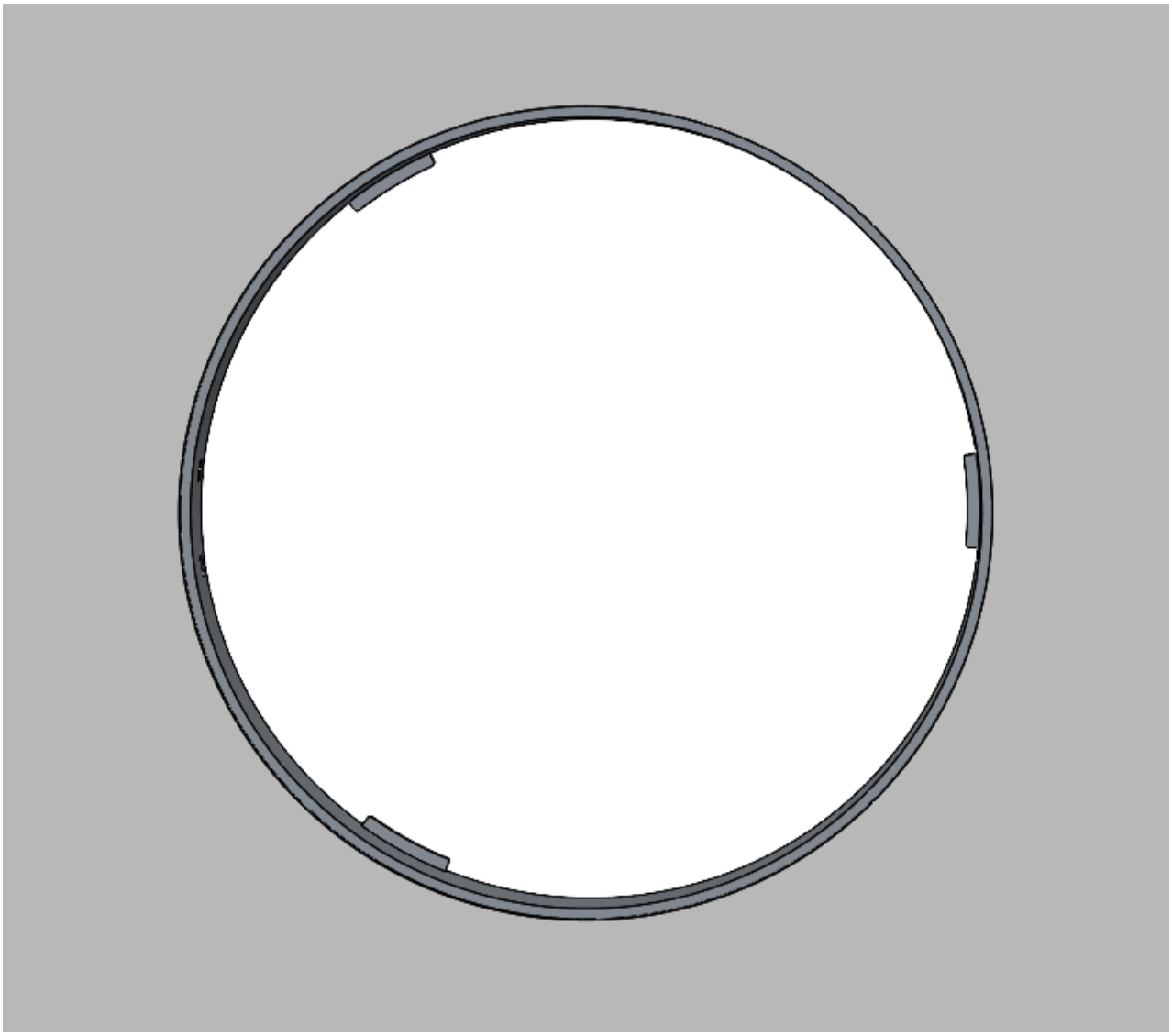

Step 7: Insert the driver through the trimless frame and connect the fixture with driver with the help of quick connectors attached to the wires of driver and fixture.

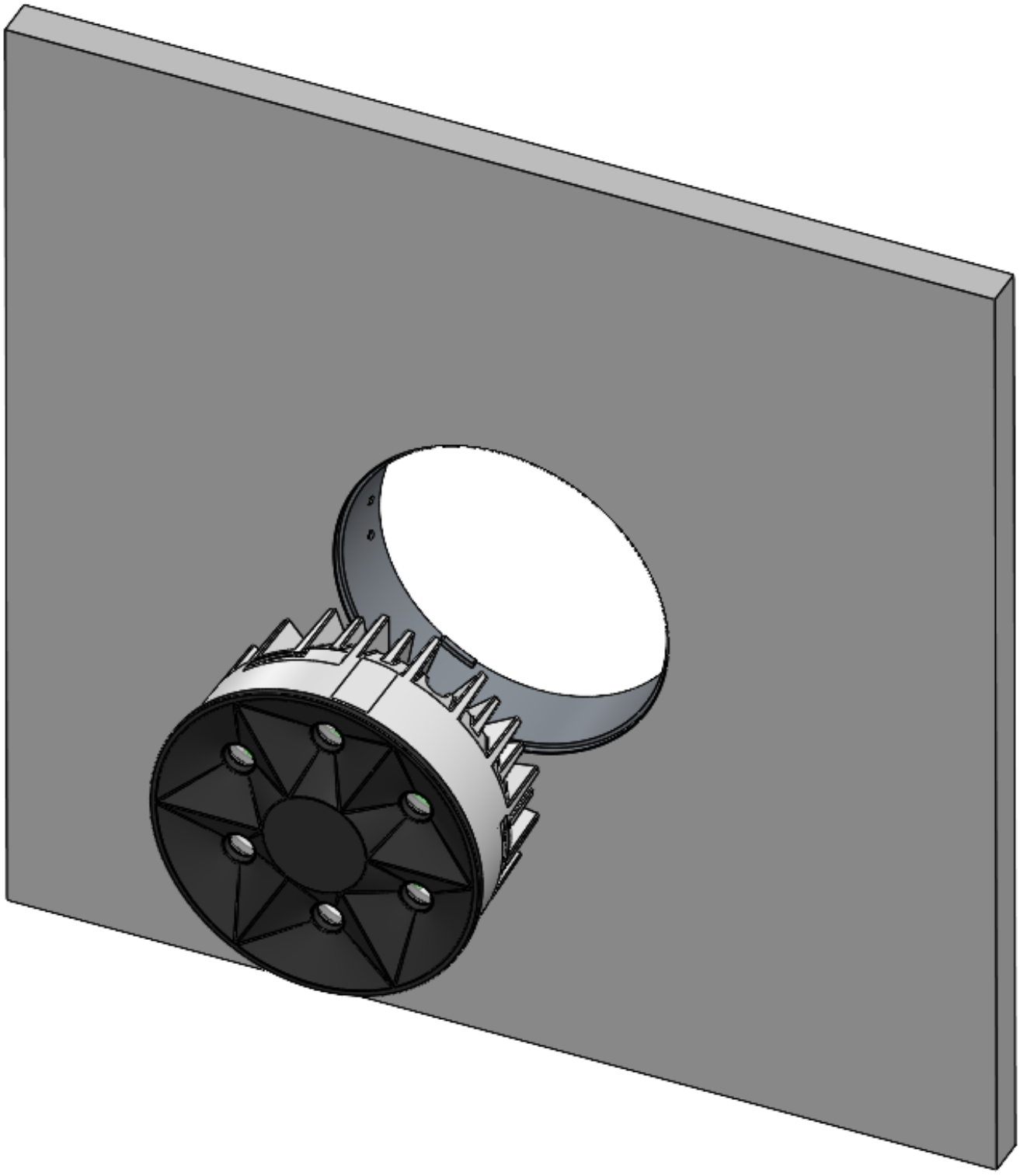

Step 8: Rotate the fixture clockwise for lock with trimless frame by using bayonet locking mechanism.

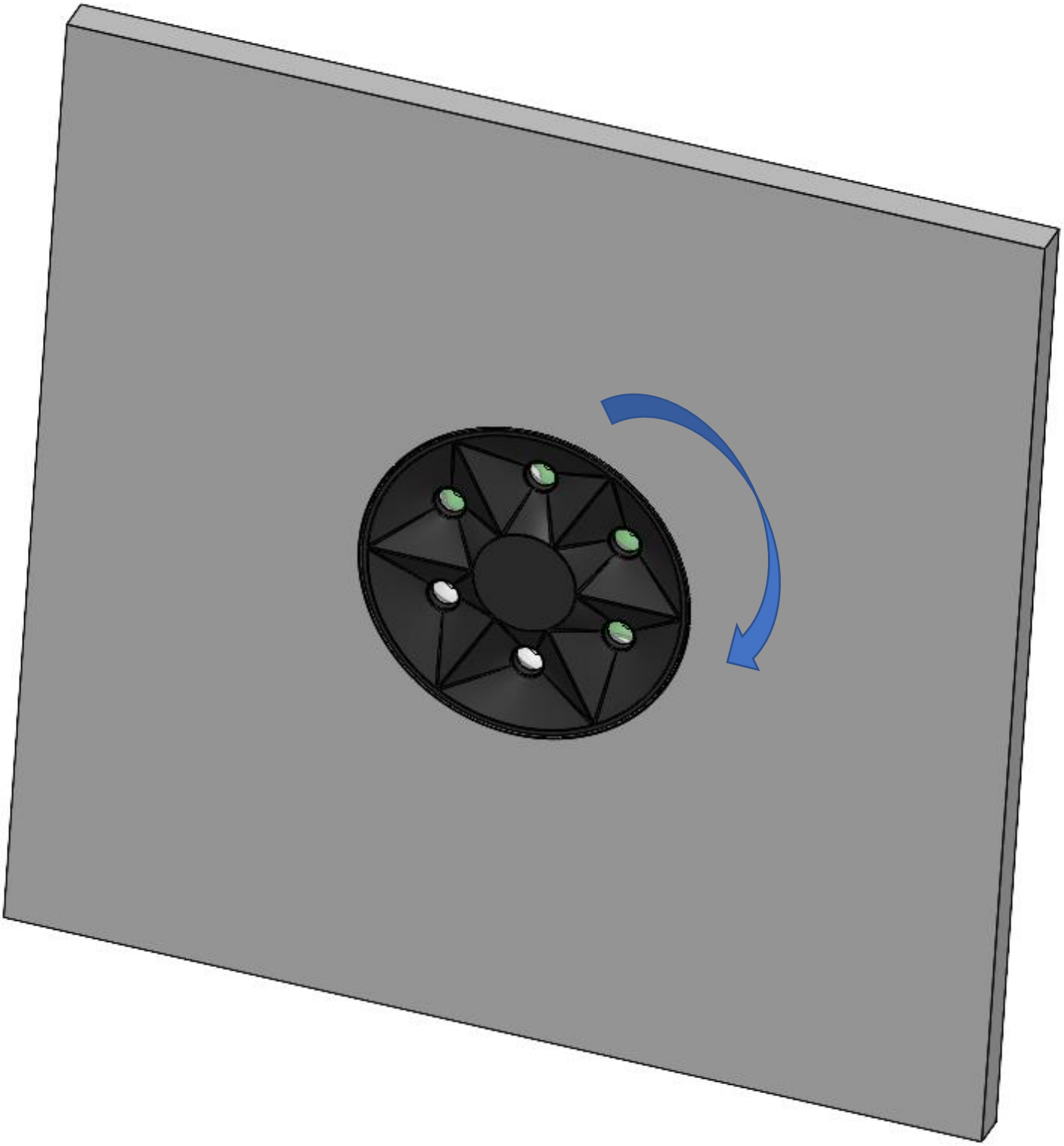

Installation is complete. Lights can be Turned On!