Rotor Full Bollard- Installation Manual

Step 1: To make a concrete foundation as shown in Fig 1. Take the dimensions of the bolt and conduit pipe from Fig 1.

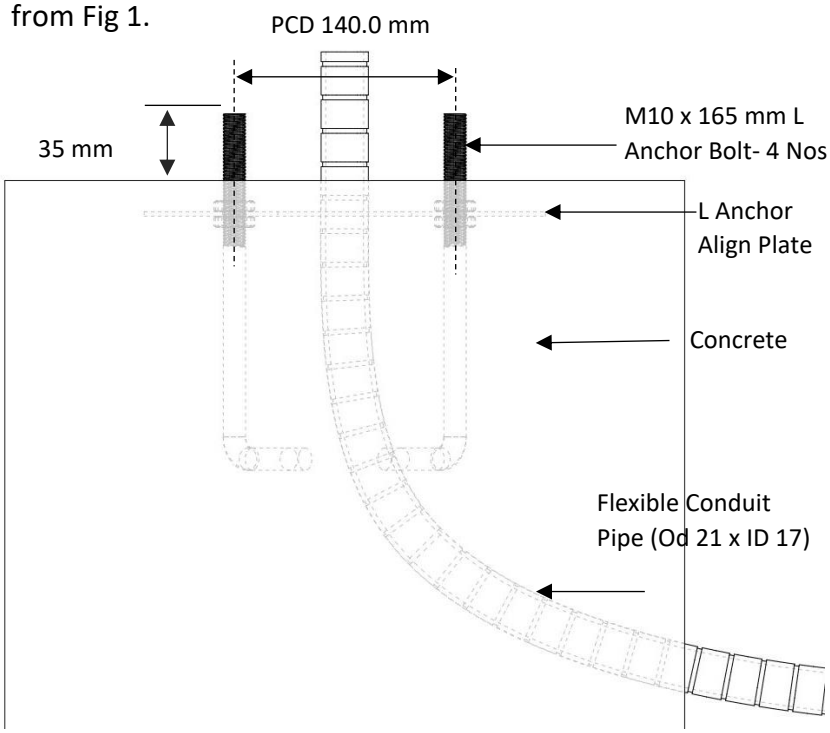

Fig.1

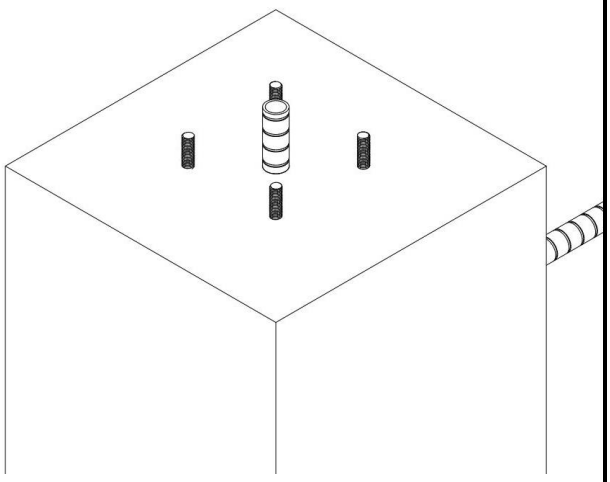

Fig.2

Step 2: Lose the M5 screw on Pole and separate the base assembly (Fig.4) from the pole.

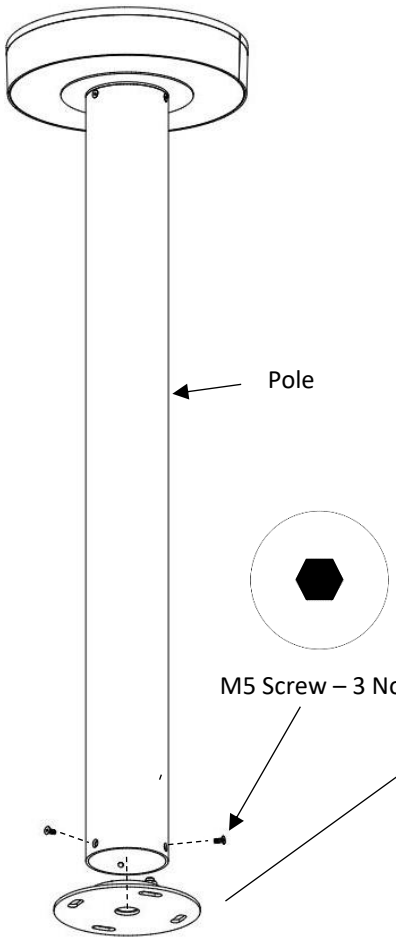

Fig.3

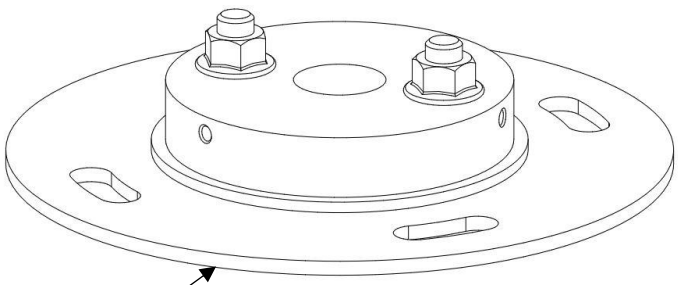

Fig.4

Step 3: Place the base assembly on the M10 nut**.**

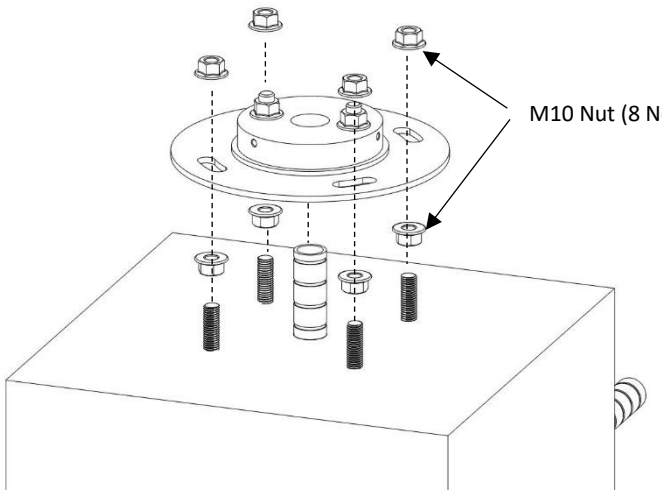

Fig.5

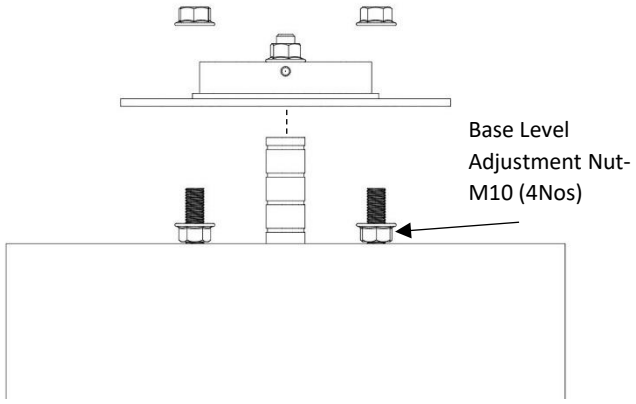

Fig.6

Step 4: Adjust the nuts for base alignment and check with the spirit level, then tighten the above M10 nuts.

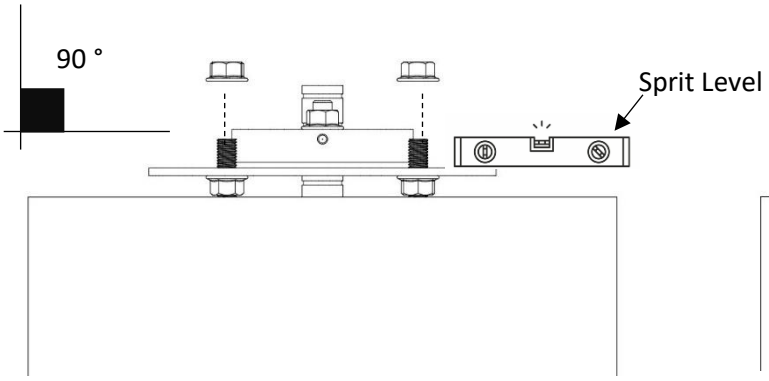

Fig.5

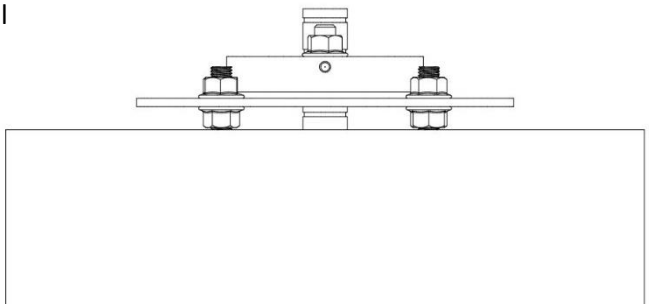

Fig.6

Step 5: Take out the main supply cable (230 V) from the flexible conduit pipe and connect it with the fixture main cable with the help of an IP connector. To scan the QR code, get the IP connector instructions.

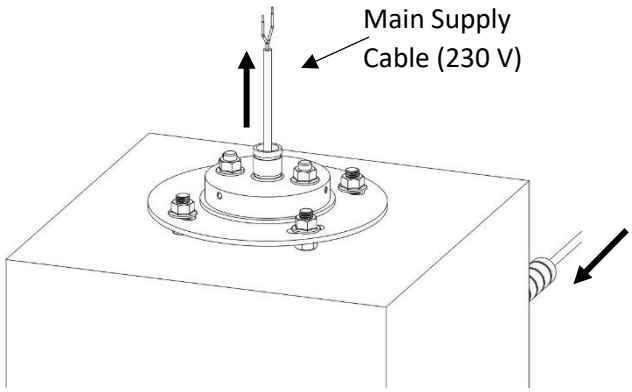

Fig.7

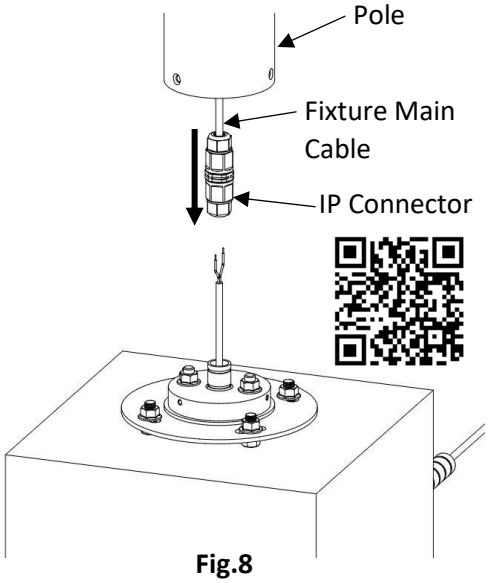

Fig.8

Step 6: Tighten the screws.

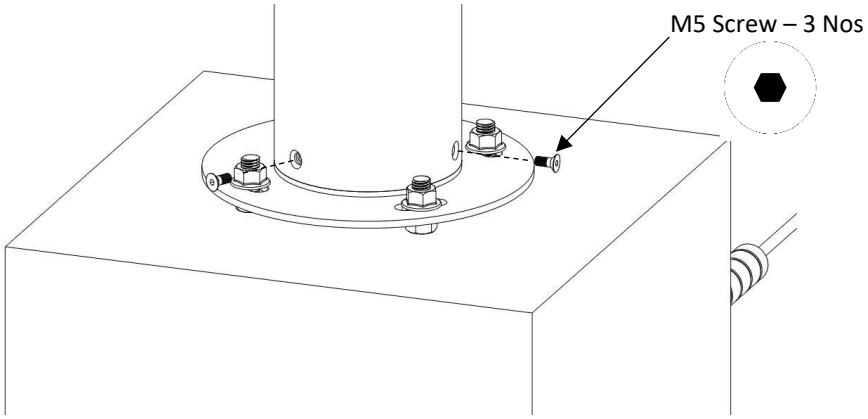

Fig.9

Step 7: Then use cement to fill the gap between the base and the foundation.

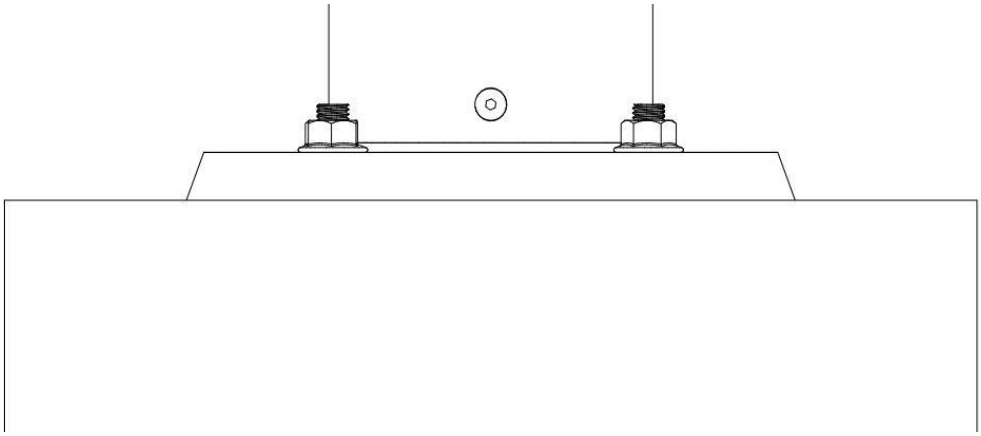

Fig.10

Installation is complete. Lights can be Turned On!

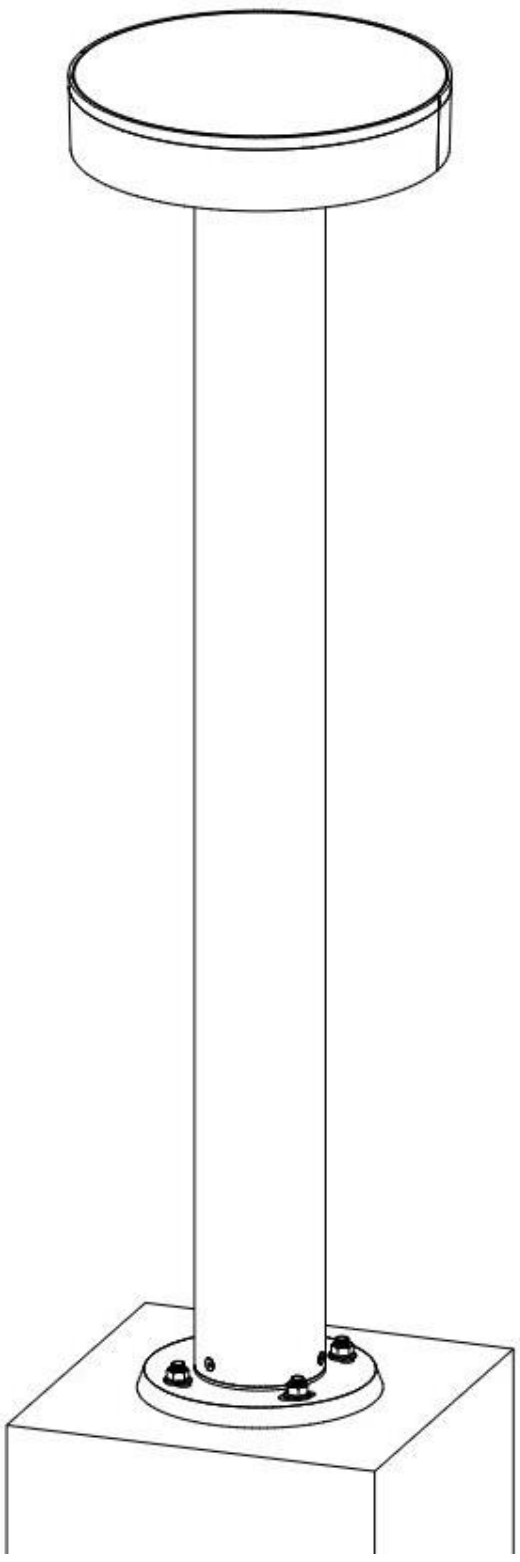

Fig.11