EOS RECESS WALLWASHER INSTALLATION MANUAL

Step 1: Make a cut out of Diameter 60mm in the ceiling as shown in below figure.

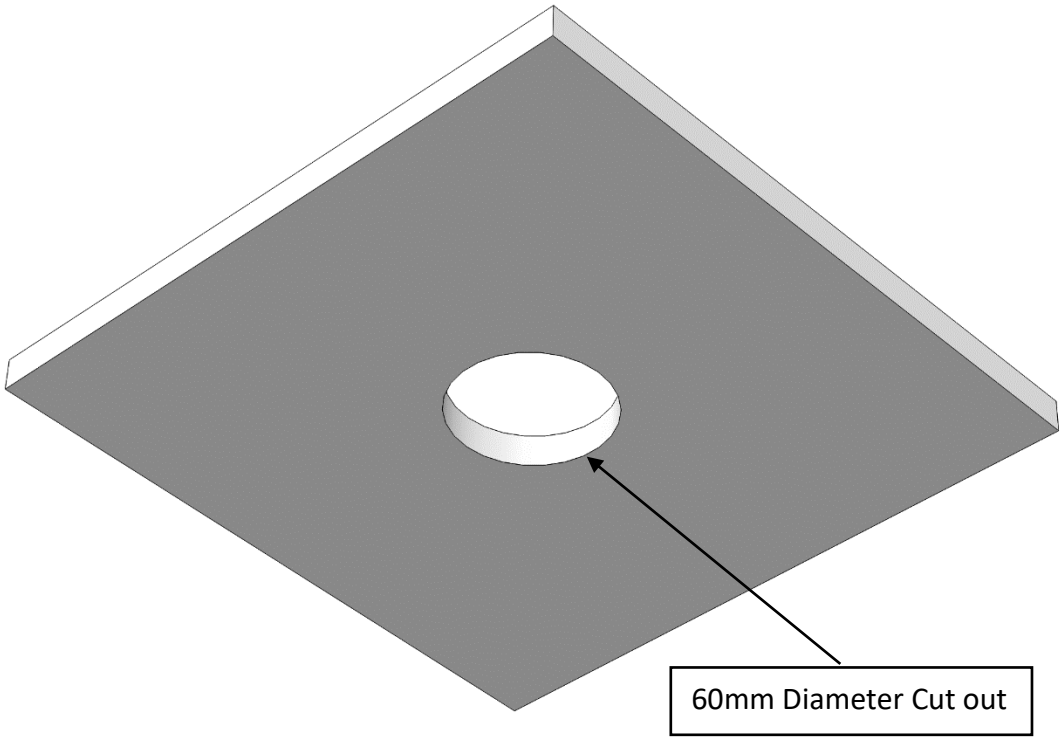

Step 2: Insert the driver through the cut out and connect the fixture with driver with the help of quick connectors attached to the wires of driver and fixture.

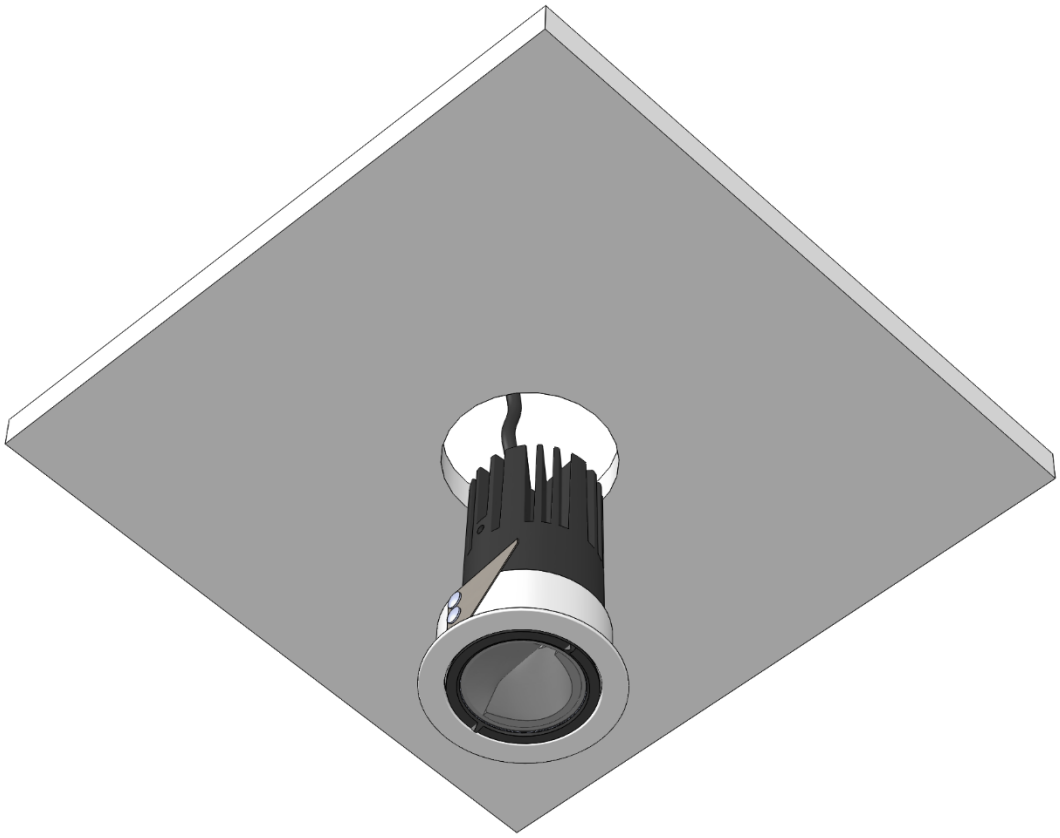

Top View

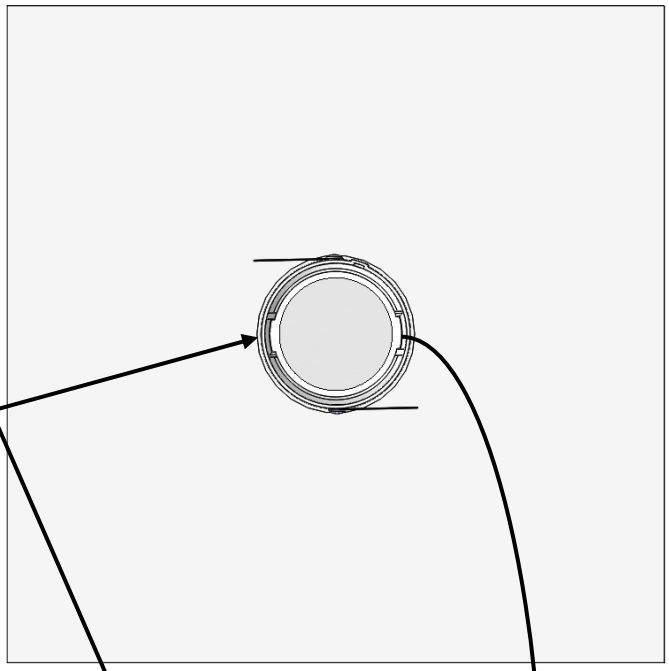

This cut portion must be parallel to the wall in case of wallwasher, otherwise the light won't fall properly on the wall.

Wall



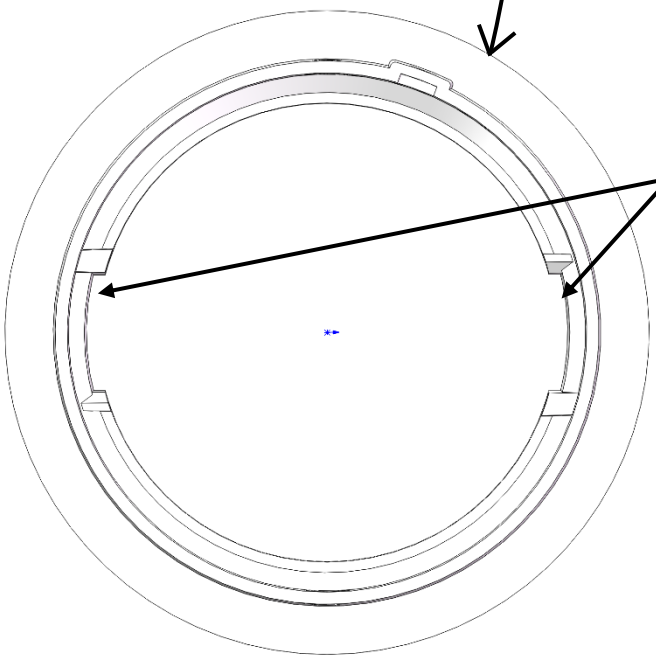

This cut portion must be parallel to the wall in case of wallwasher, otherwise the light won't fall properly on the wall.

Enlarged View

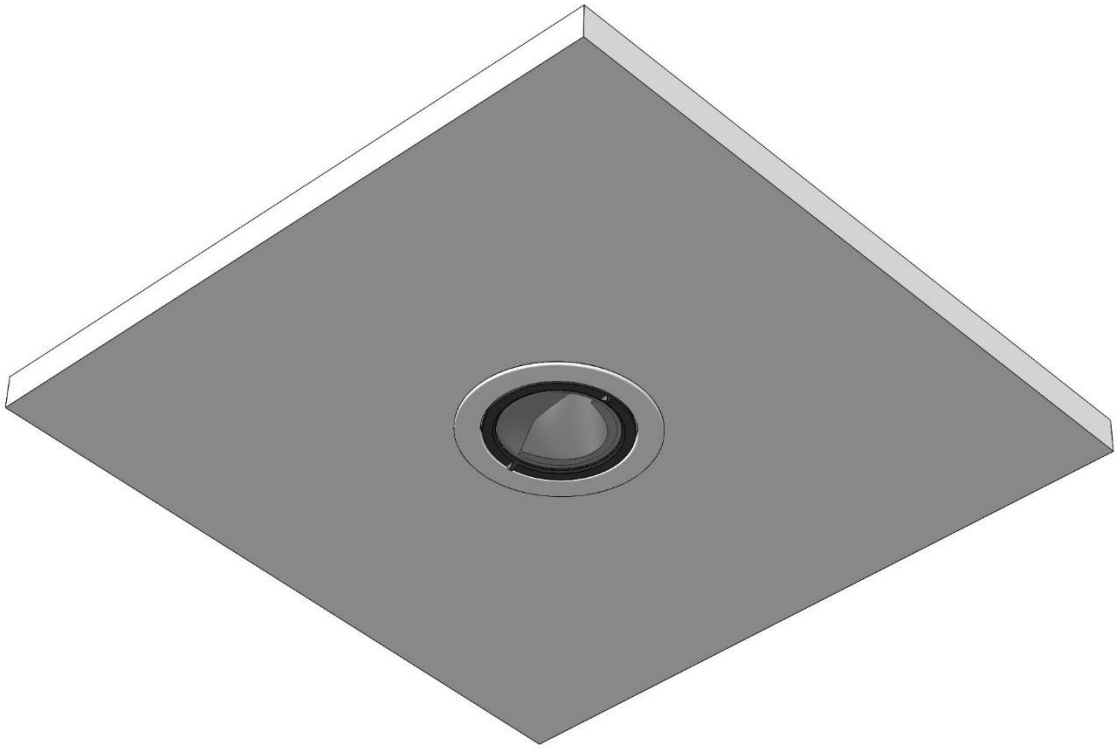

Installation is complete. Lights can be Turned On!

Additional Note: For purpose of maintenance remove the fixture by rotating the plastic rim do not remove the recess housing frame. As shown in the figure.

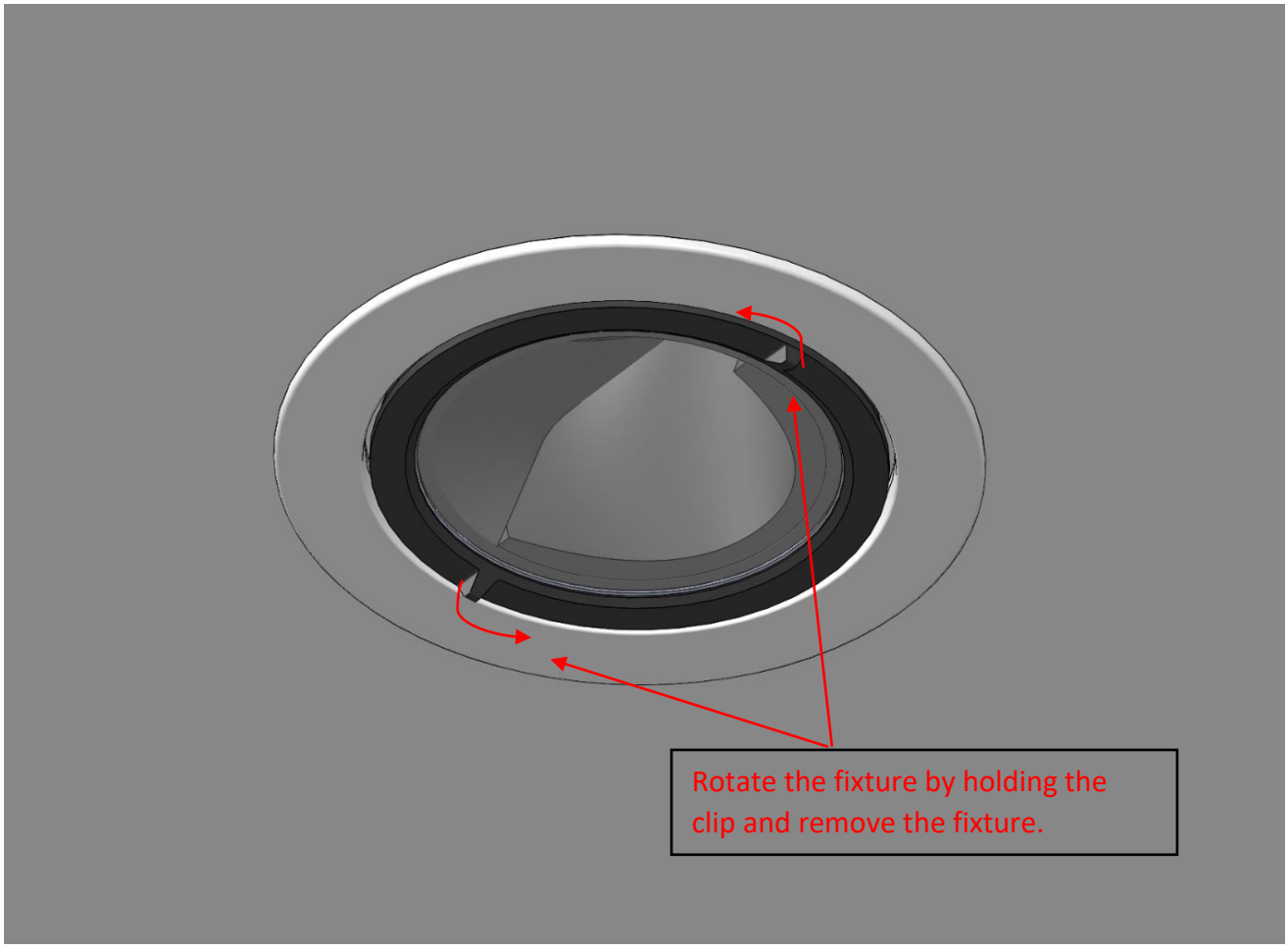

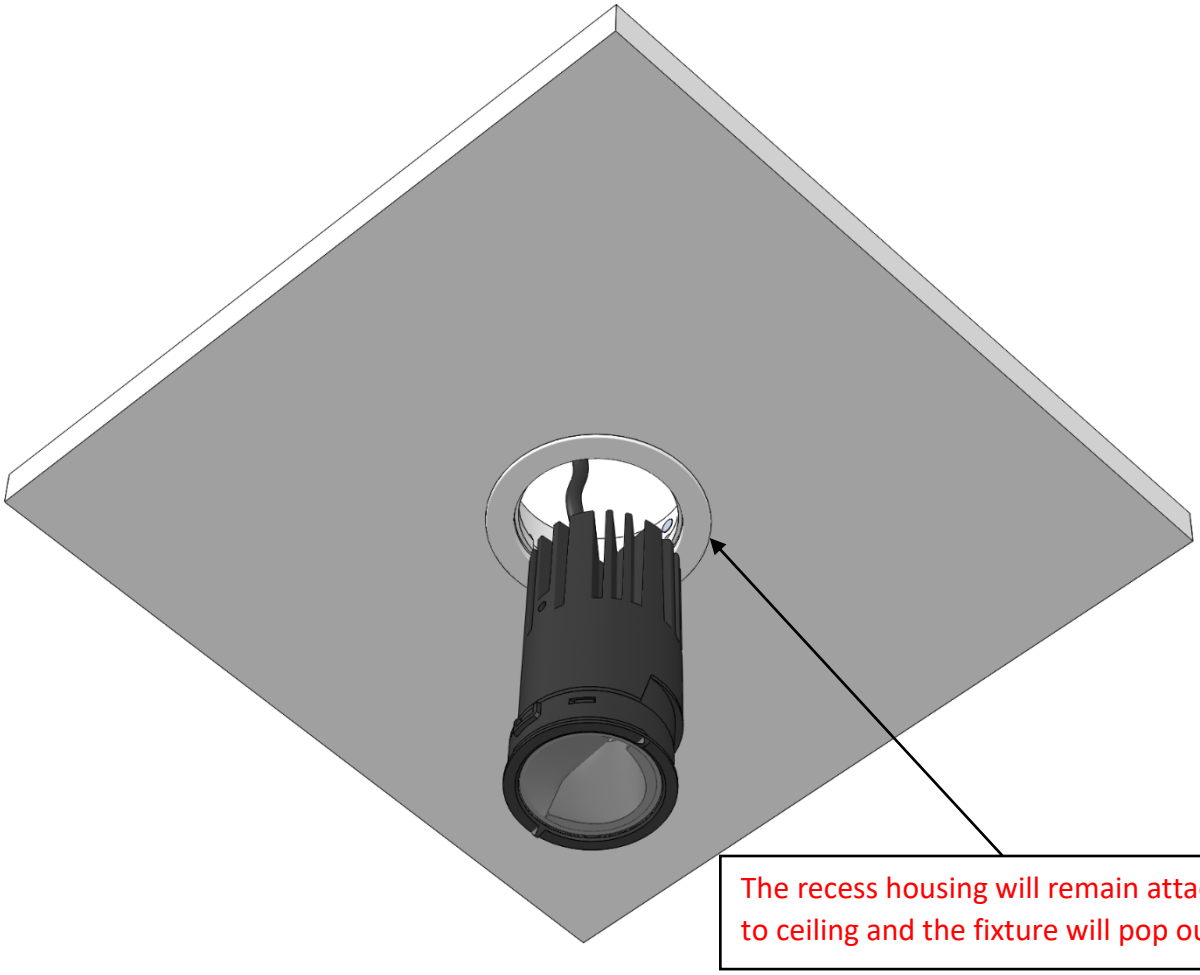

After maintenance work install back the fixture at its original position.

