Tumblerr Pendant Mounting Installation Manual (Integrated Driver)

Step 1 : Create center hole for main supply wire as shown in below figure. Also create 2 hole for tumblerr canopy plate mounting screw as shown in below figure.

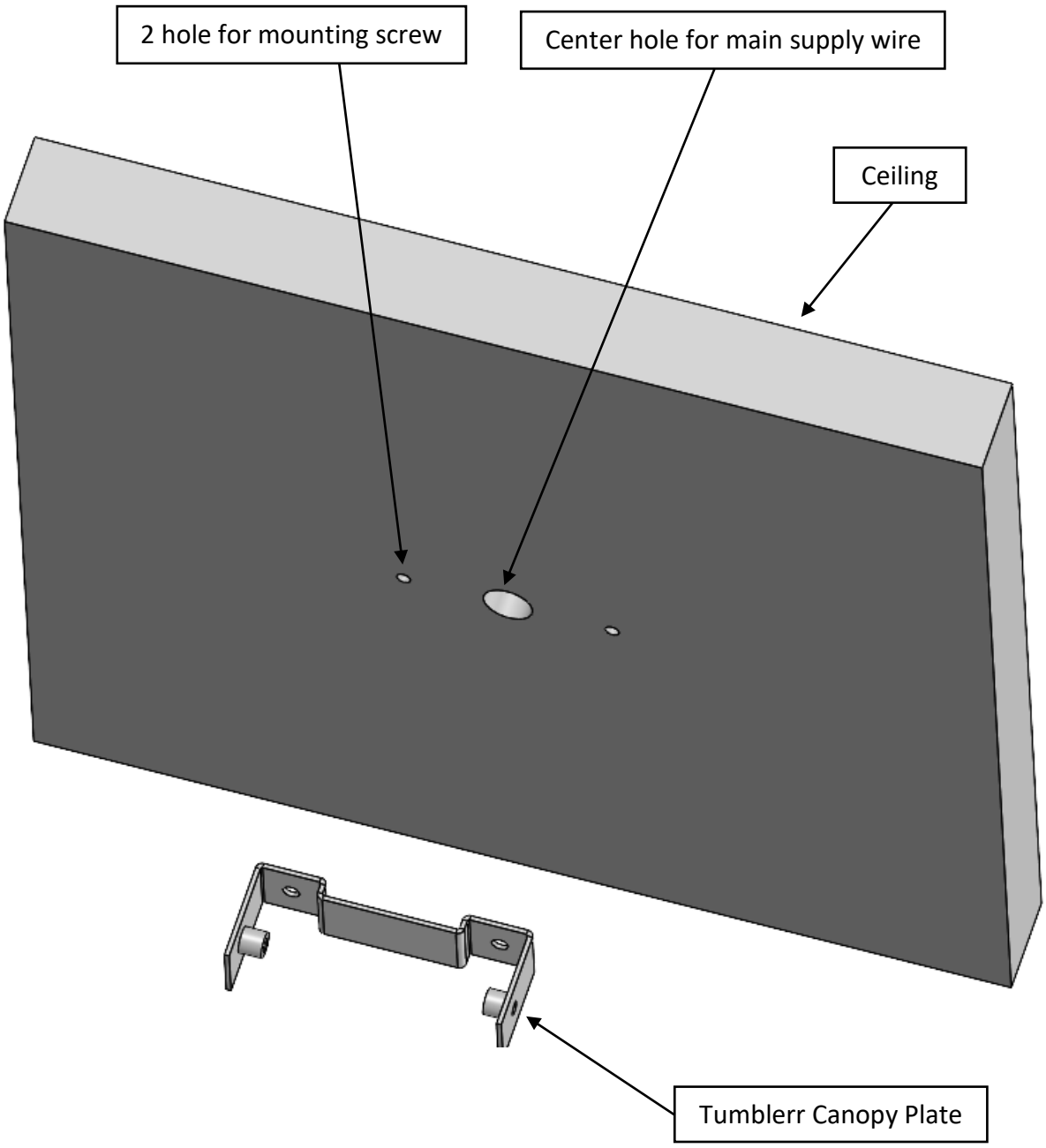

Step 2 : Take out main supply wire from center hole as shown in below figure.

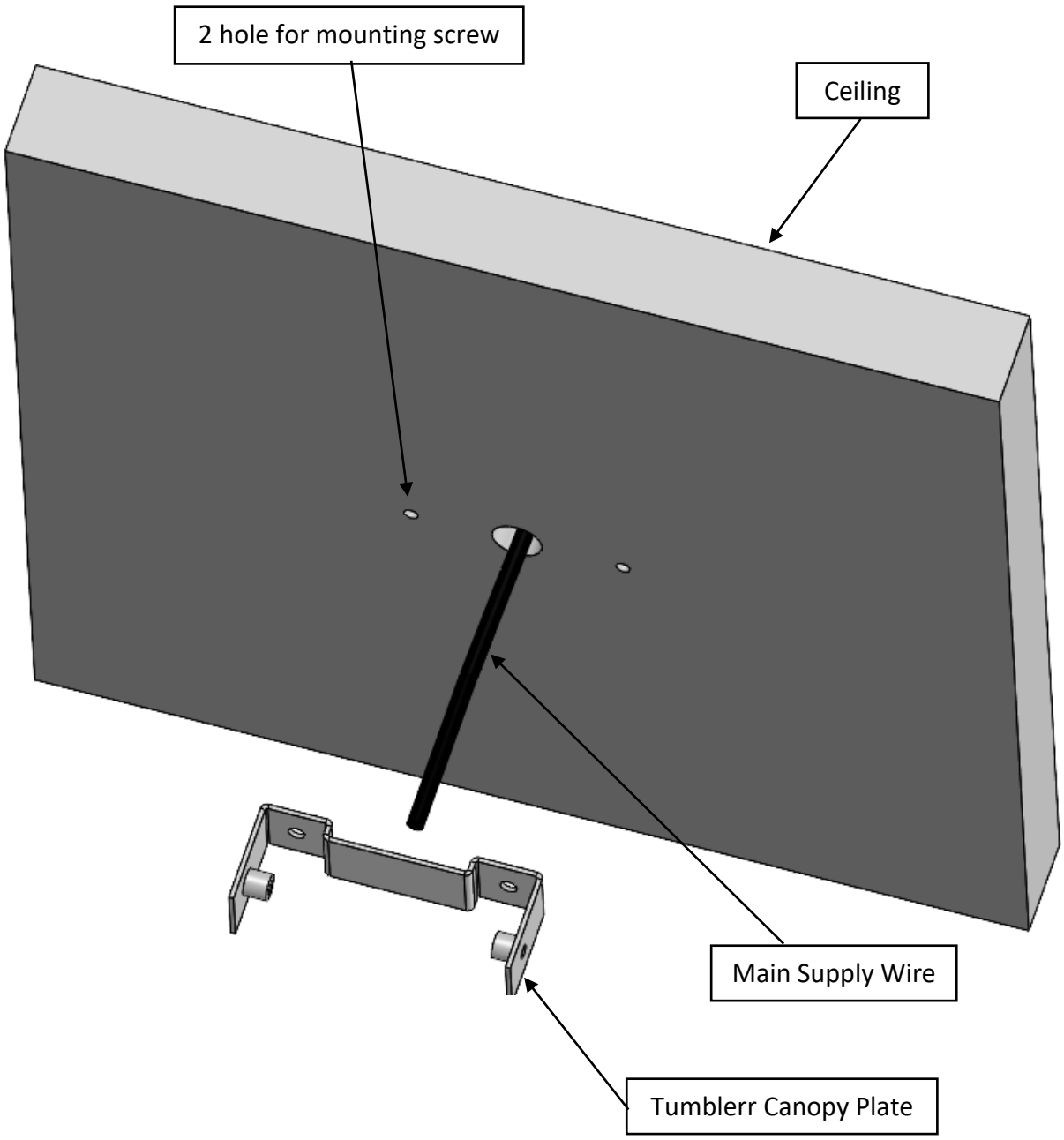

Step 3 : The tumblerr canopy plate fix with ceiling by using 2 mounting screw shown in below figure.

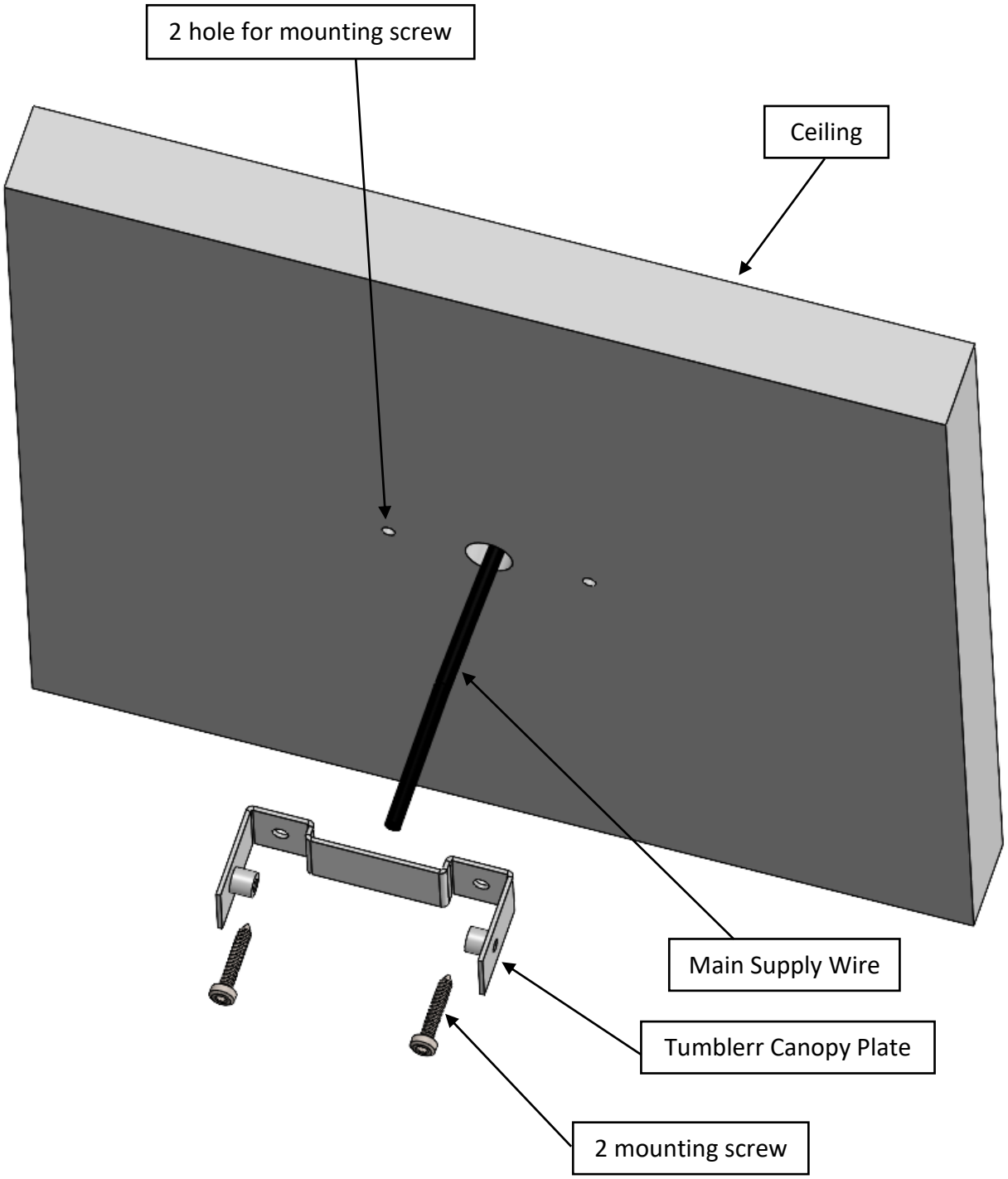

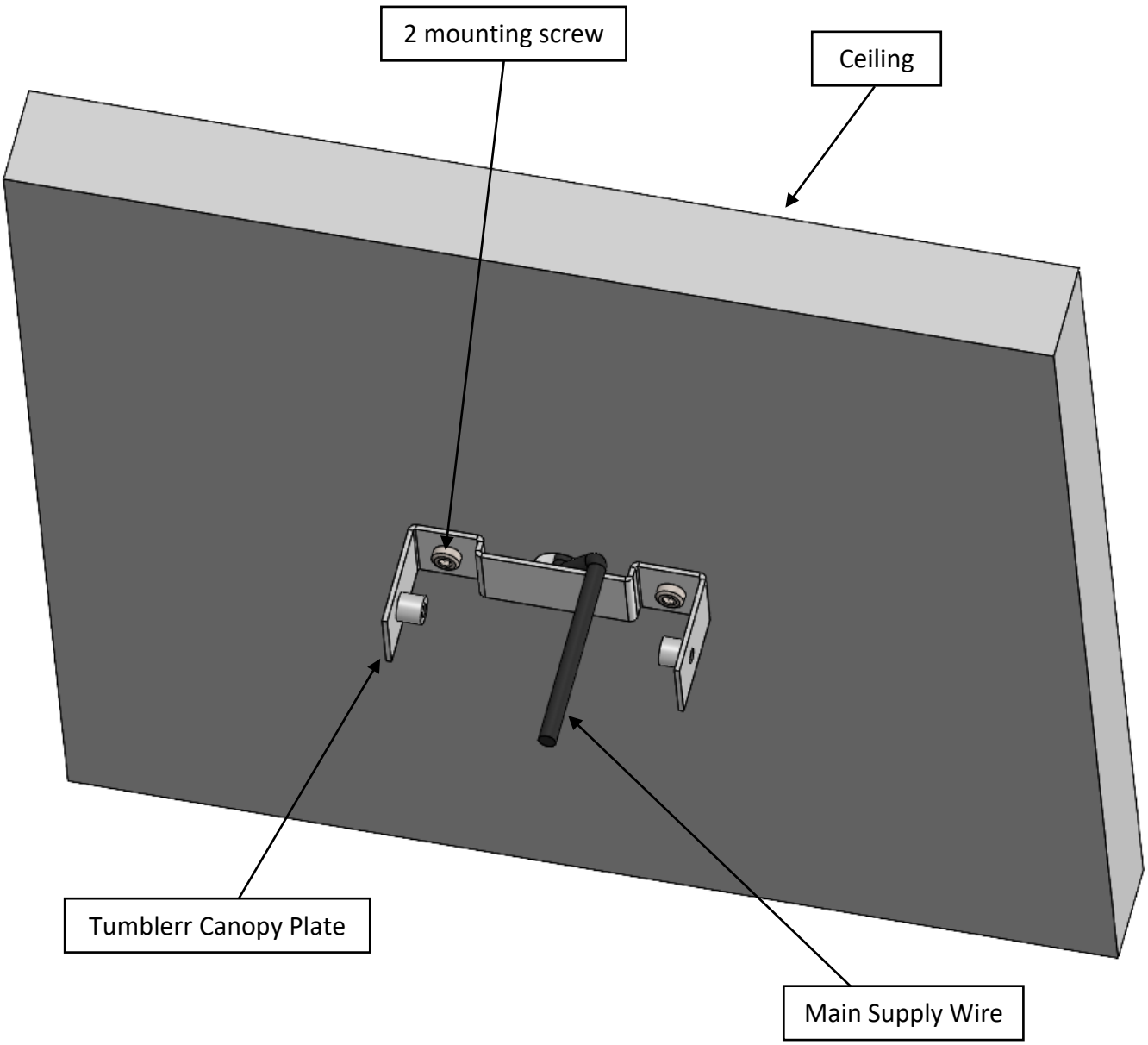
2 mounting screw
Ceiling
Tumblerr Canopy Plate
Main Supply Wire

Step 4 : Connect main supply wire to driver input. Also connect dc supply wire to driver output as shown in below figure.

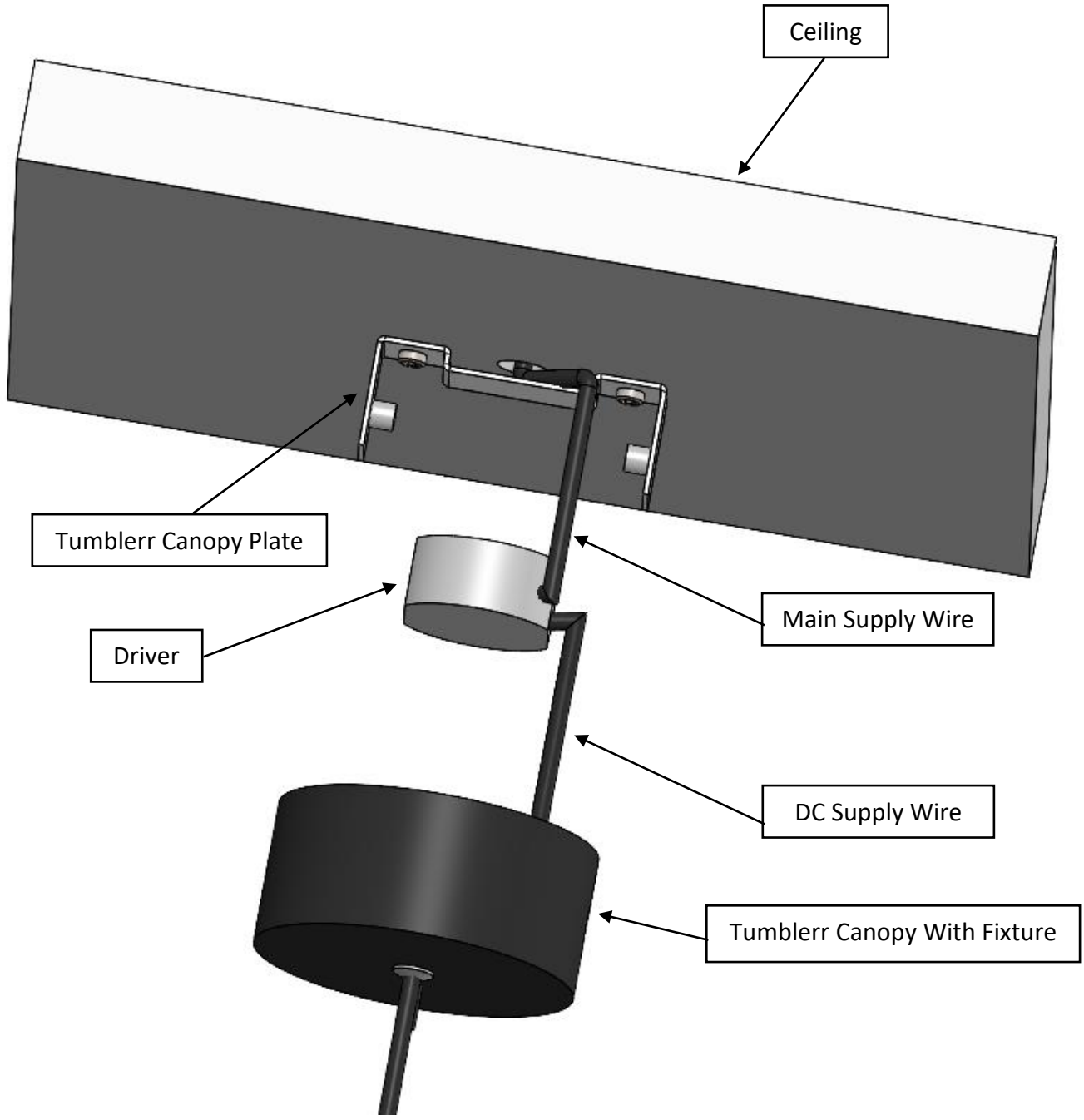

Step 5 : Driver fix with tumblerr canopy plate by double side tap as shown in below figure.

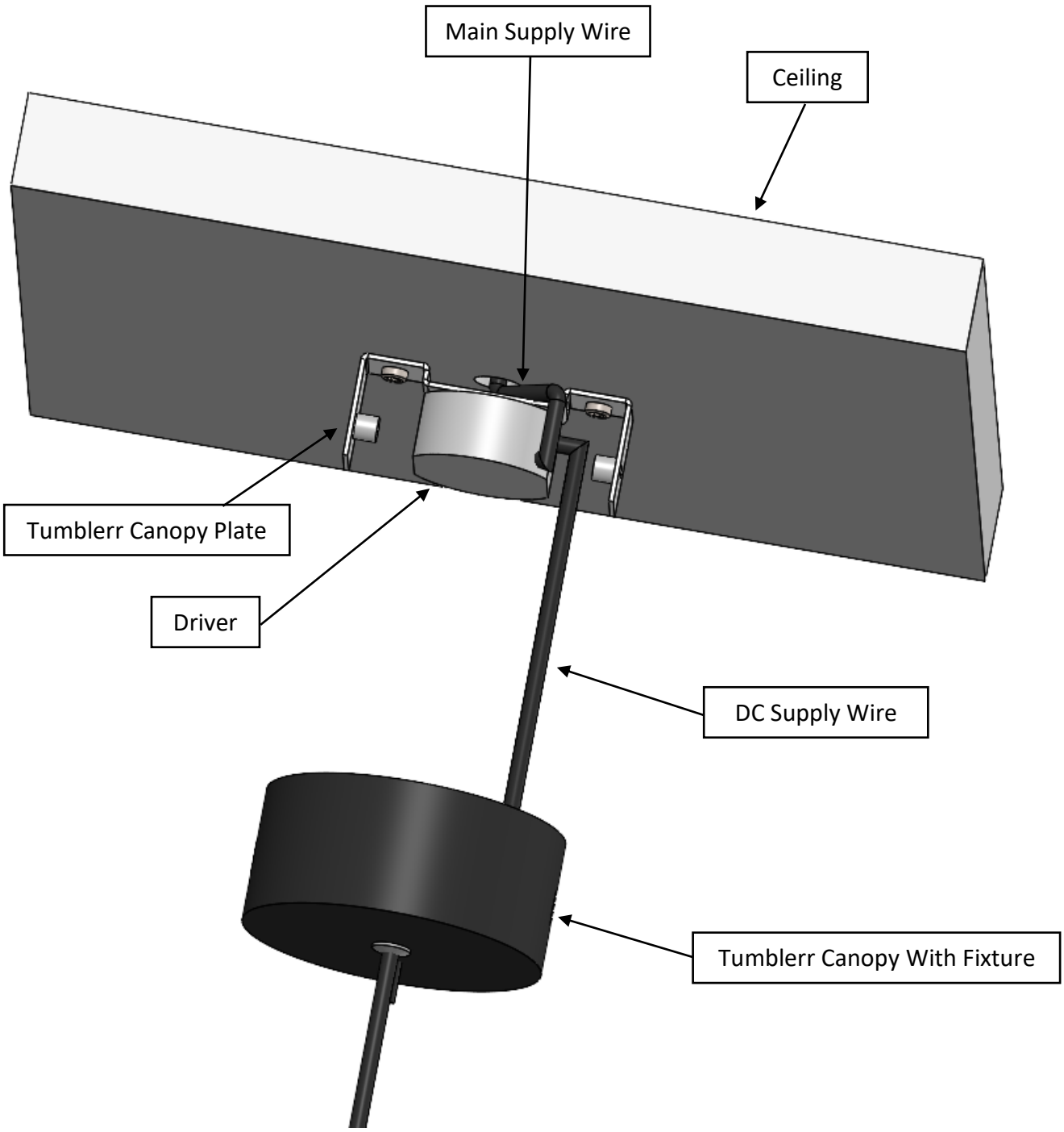

Step 6 : Tumblerr canopy with fixture fix with tumblerr canopy plate by using 2 mounting screw as shown in below figure.

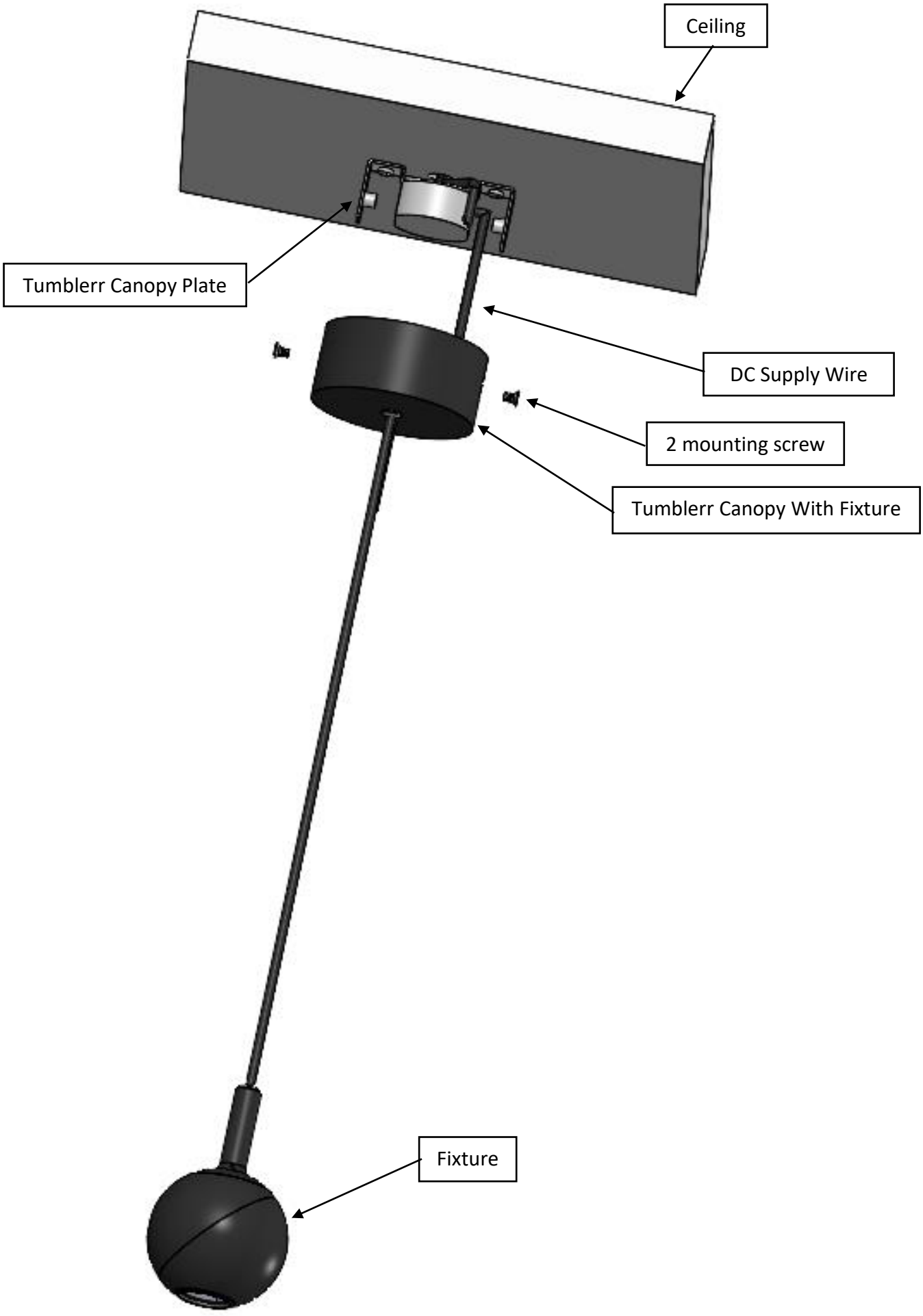

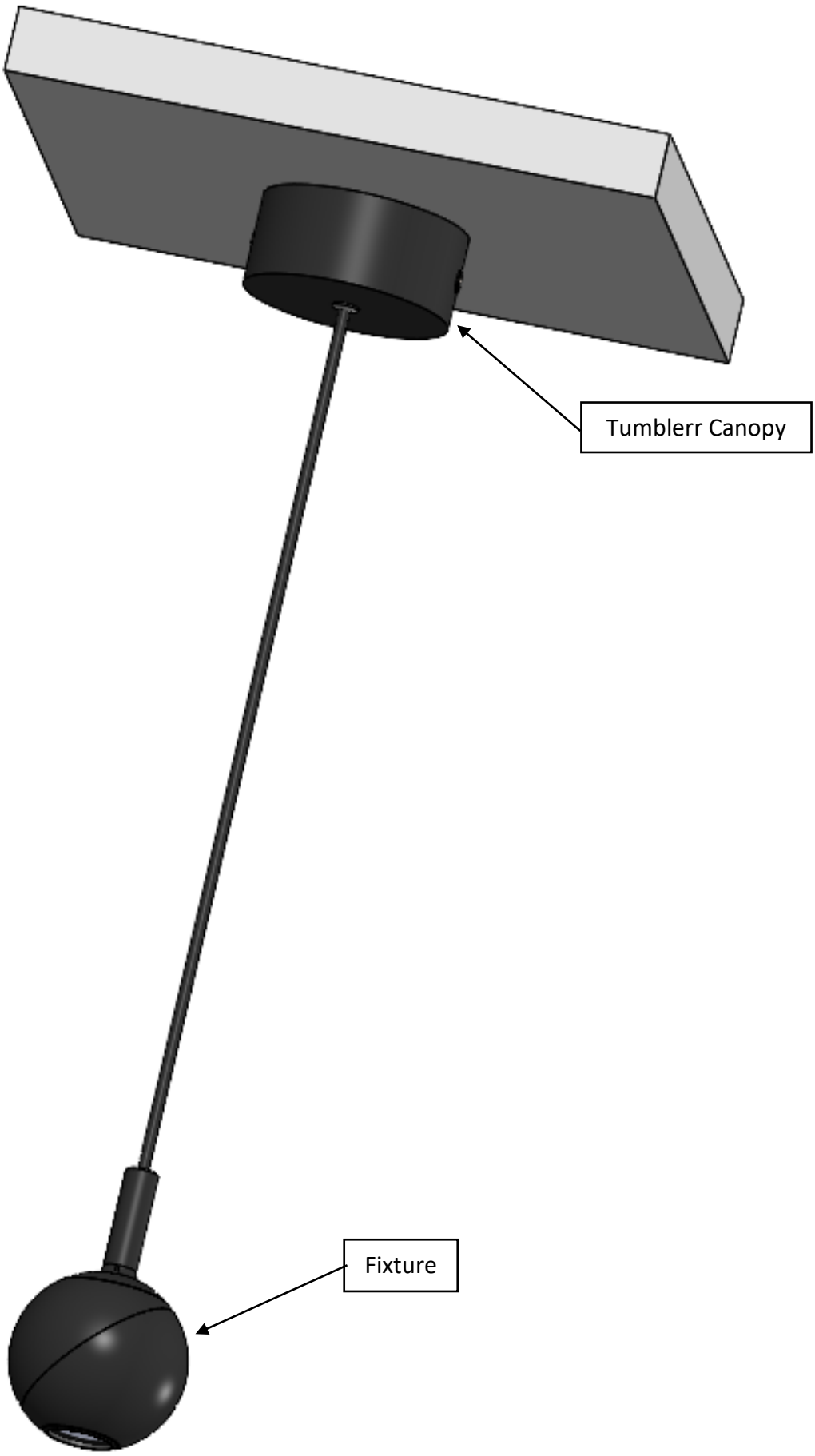
Tumblerr Canopy
Fixture

Step 7 : Rotate fixture by holding bottom part as per requirement, set your light spot.

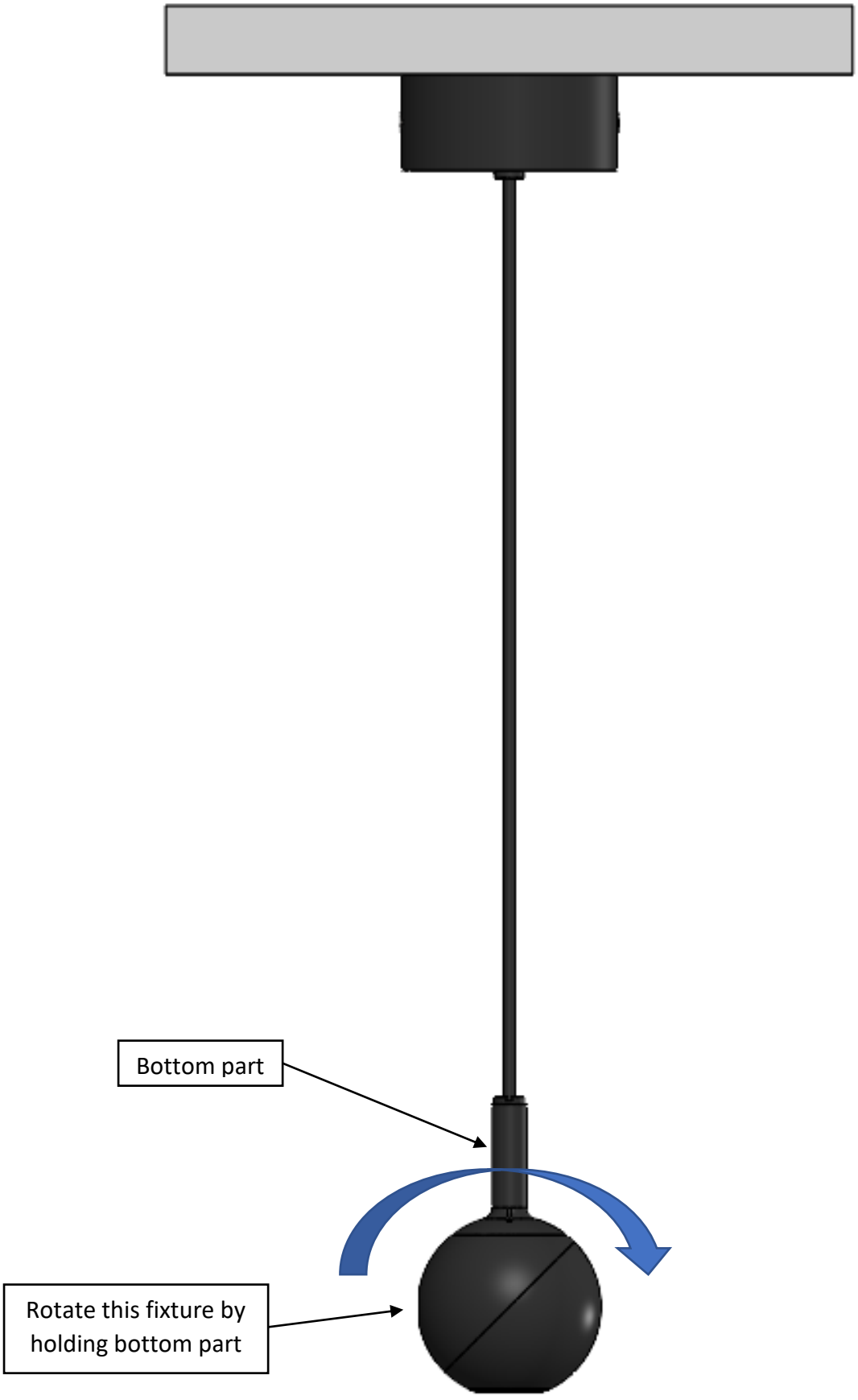

Step 8 :Rotate top sphere by holding bottom sphere as per requirement, set your light spot.

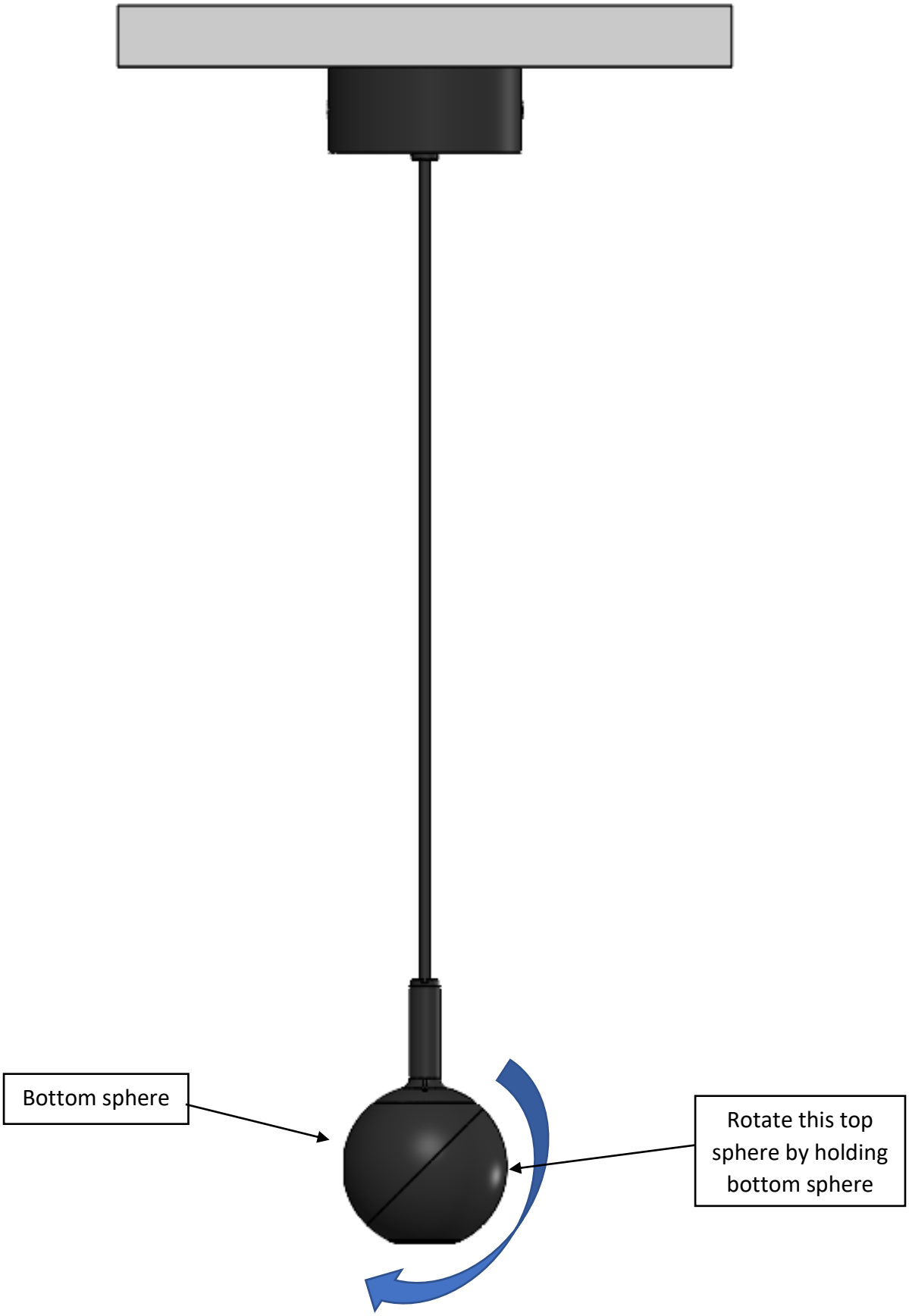

Installation is complete. Lights can be Turned On!