ZONA MAGNUS 4X RECESS INSTALLATION MANUAL

Step 1: Make a cut out of SQ 73mm x 73mm in the ceiling as shown in below figure.

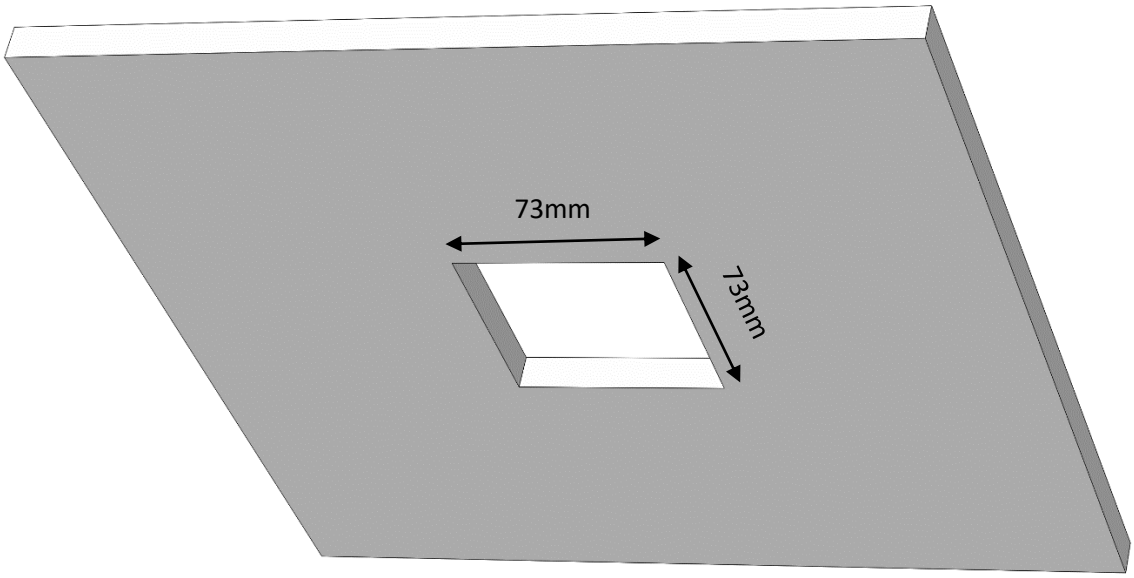

Step 2: Loose the toggle attached to the recess housing and fix the housing properly in the cut out made.

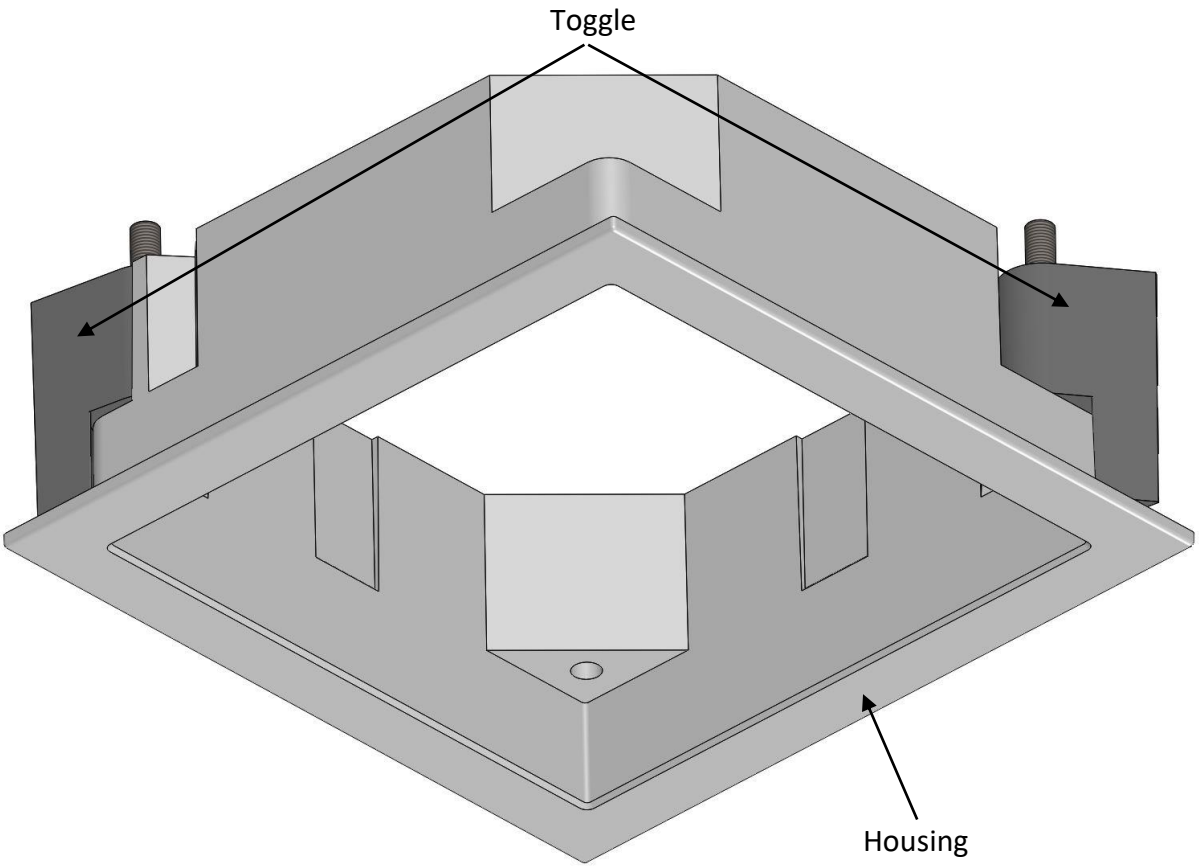

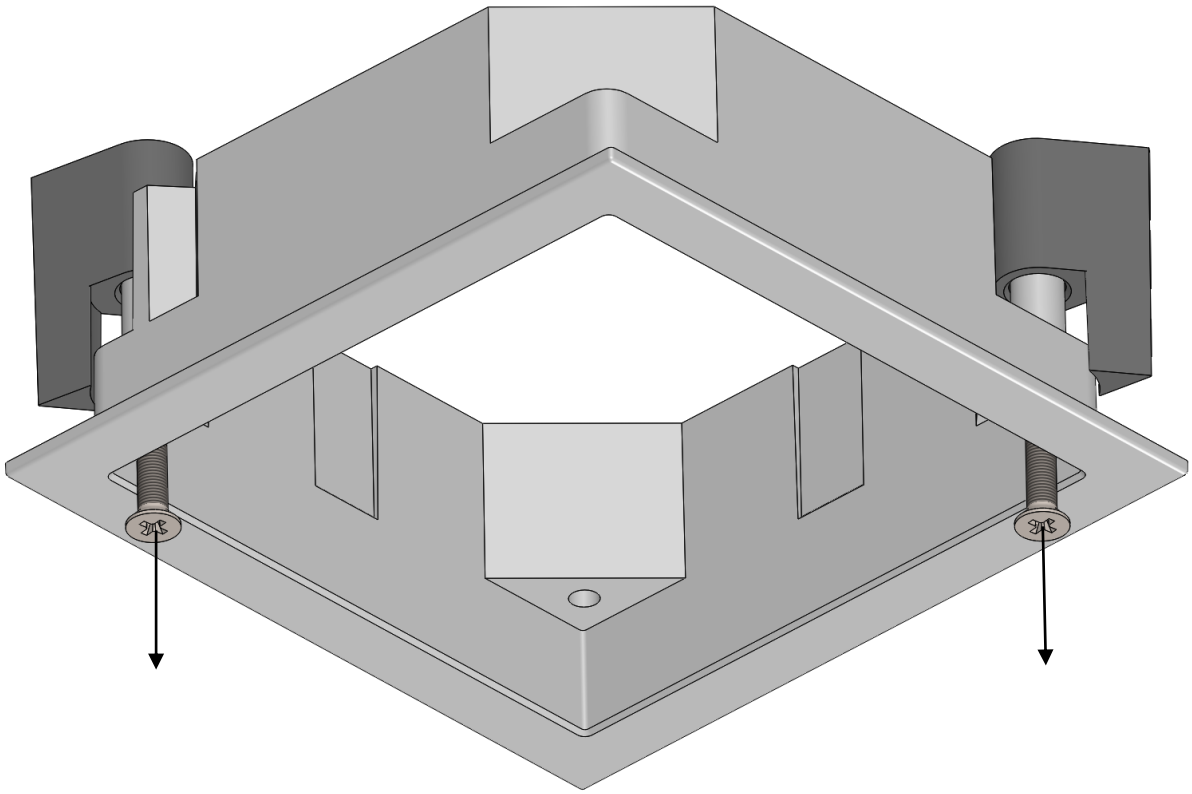

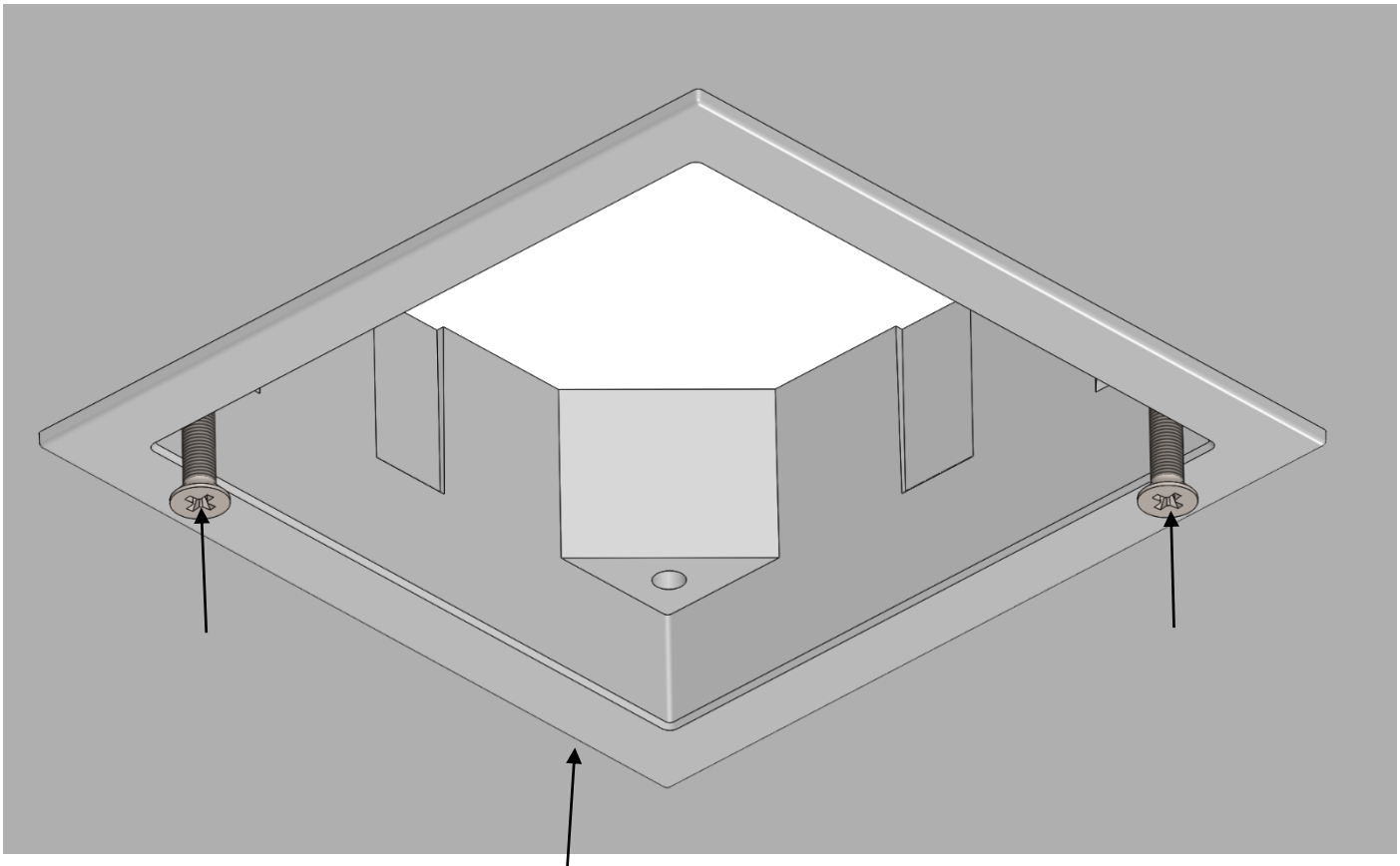

Make sure that housing is fixed properly inside the cut out and tight the toggle screws

Step 3: Insert the driver through the housing and connect the fixture with driver with the help of quick connectors attached to the wires of driver and fixture, then screw the fixture to the housing.

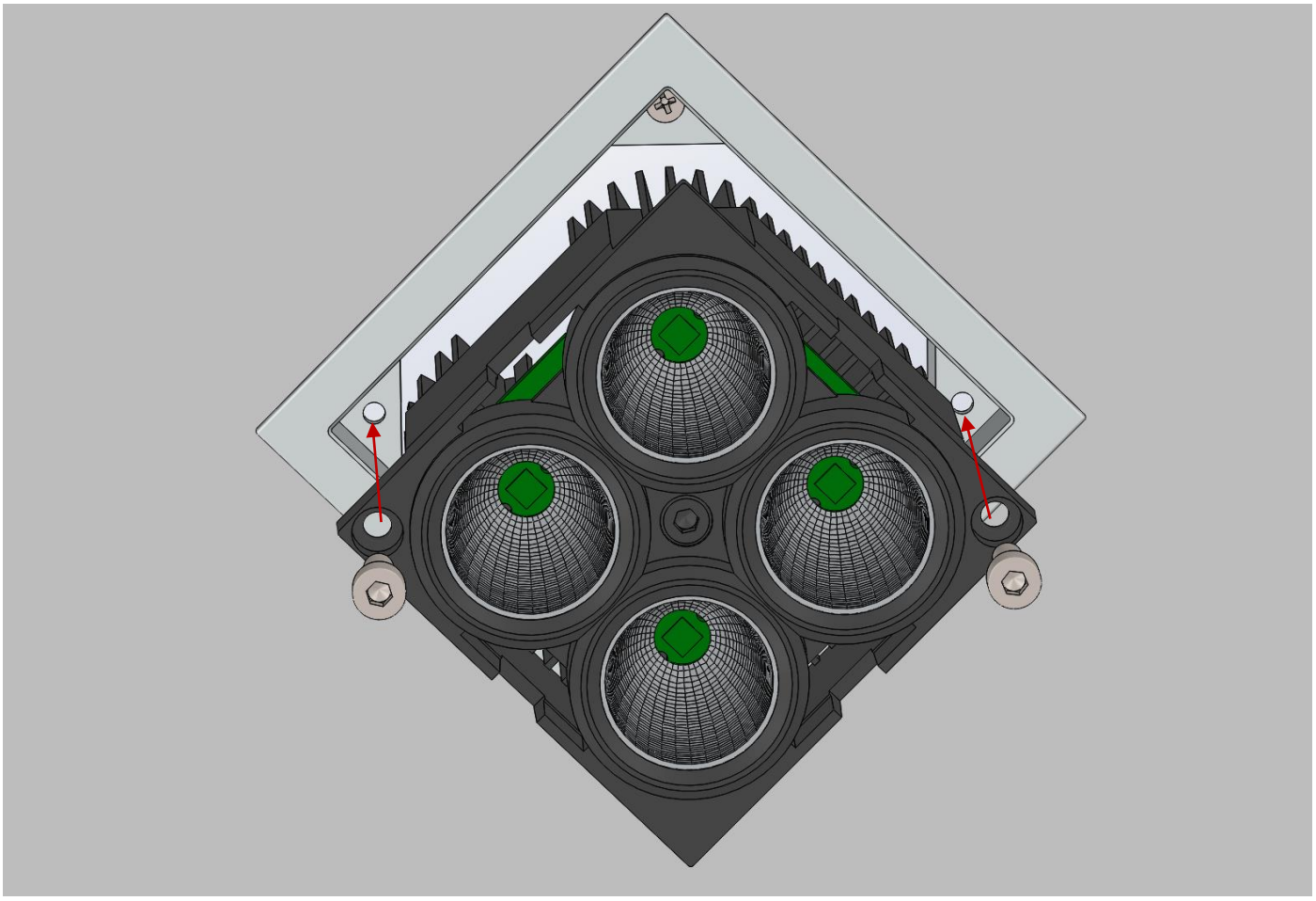

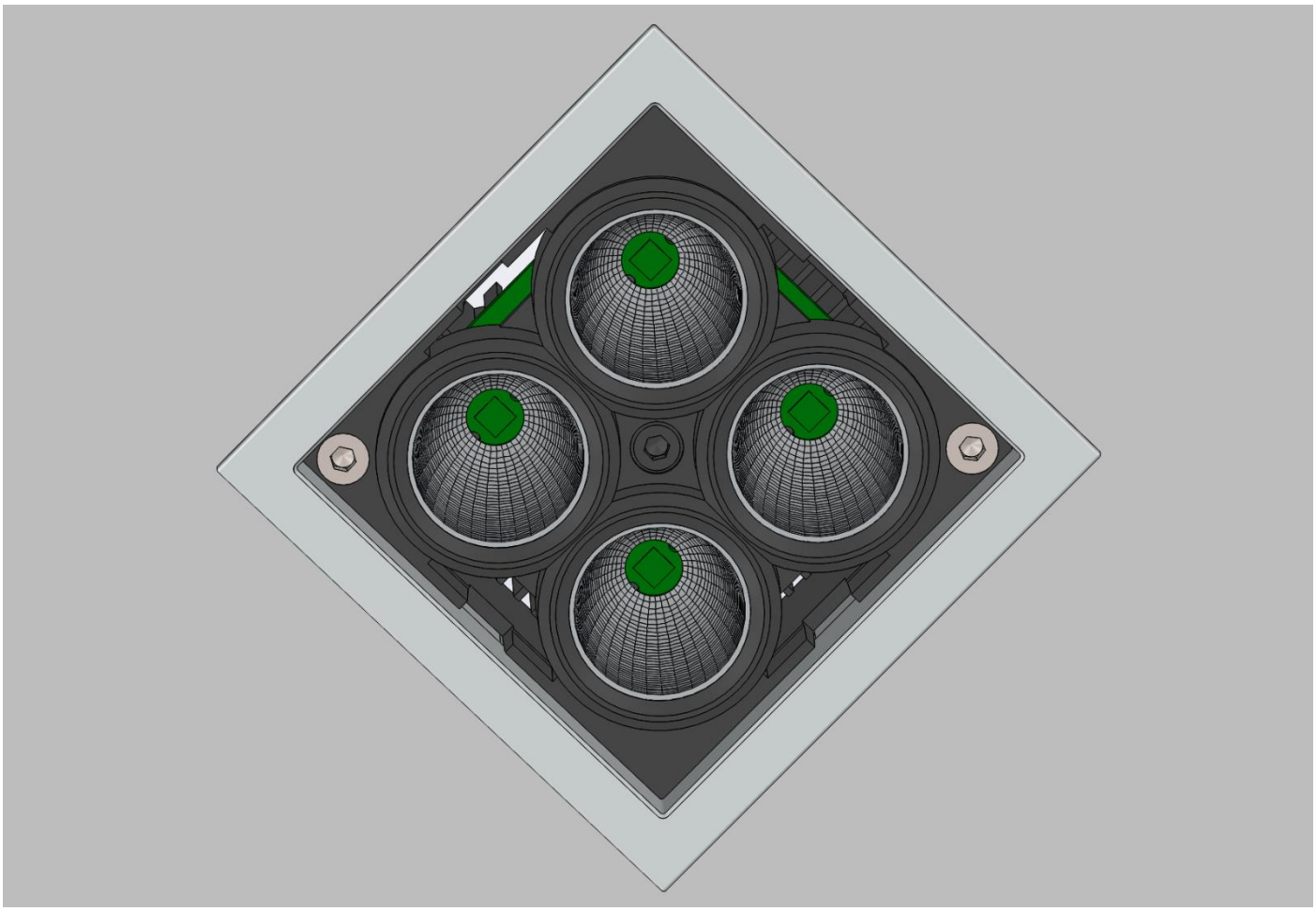

Step 4: Now fit the Zona Magnus cover frame in the fixture which is made to be snap fit.

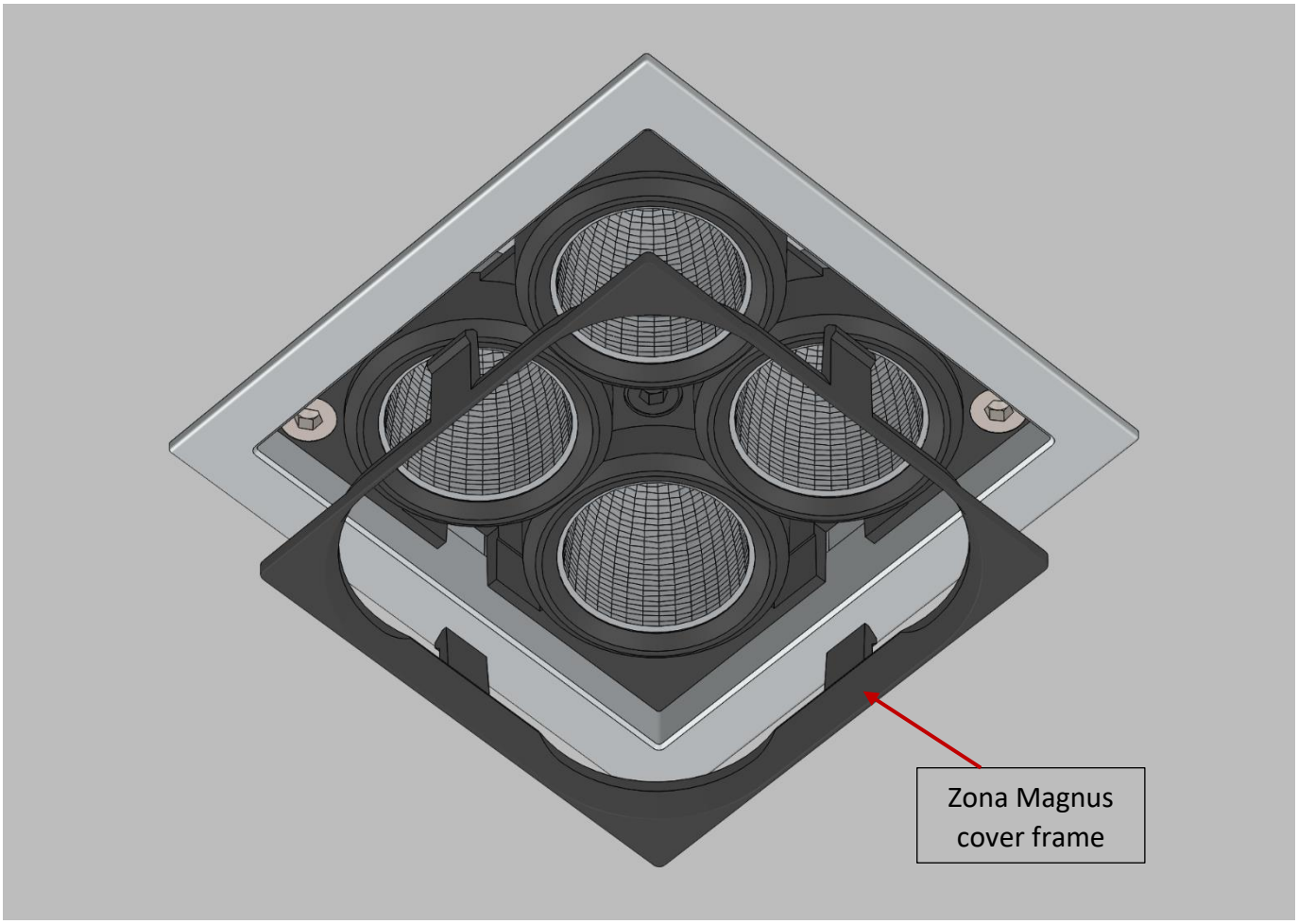

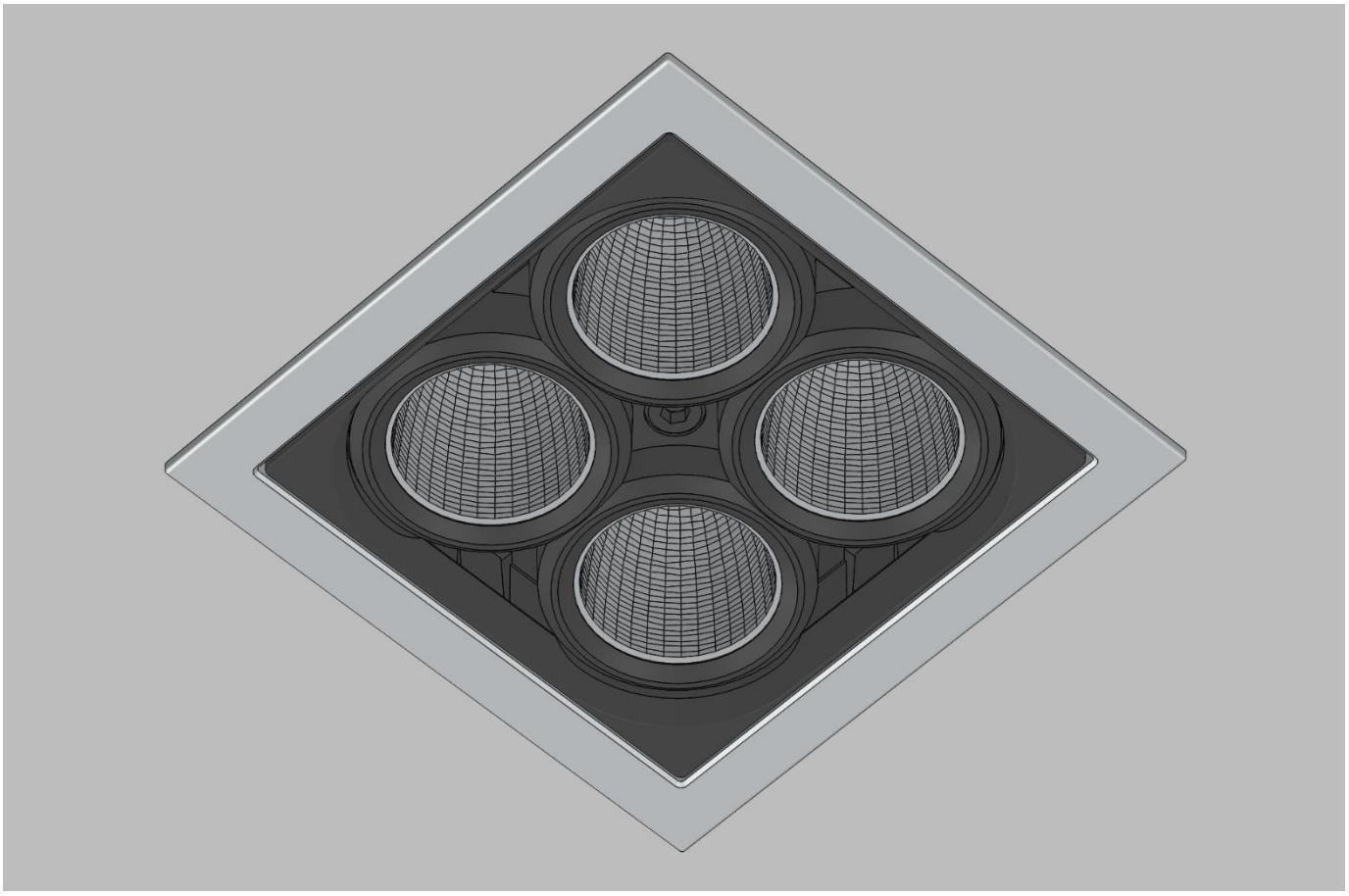

Installation is complete. Lights can be Turned On!