Zona Inline Perdu 6X Linear Trimless Installation Manual

Step 1: Make a cut out of 198mm x 48mm in the ceiling as shown in below figure.

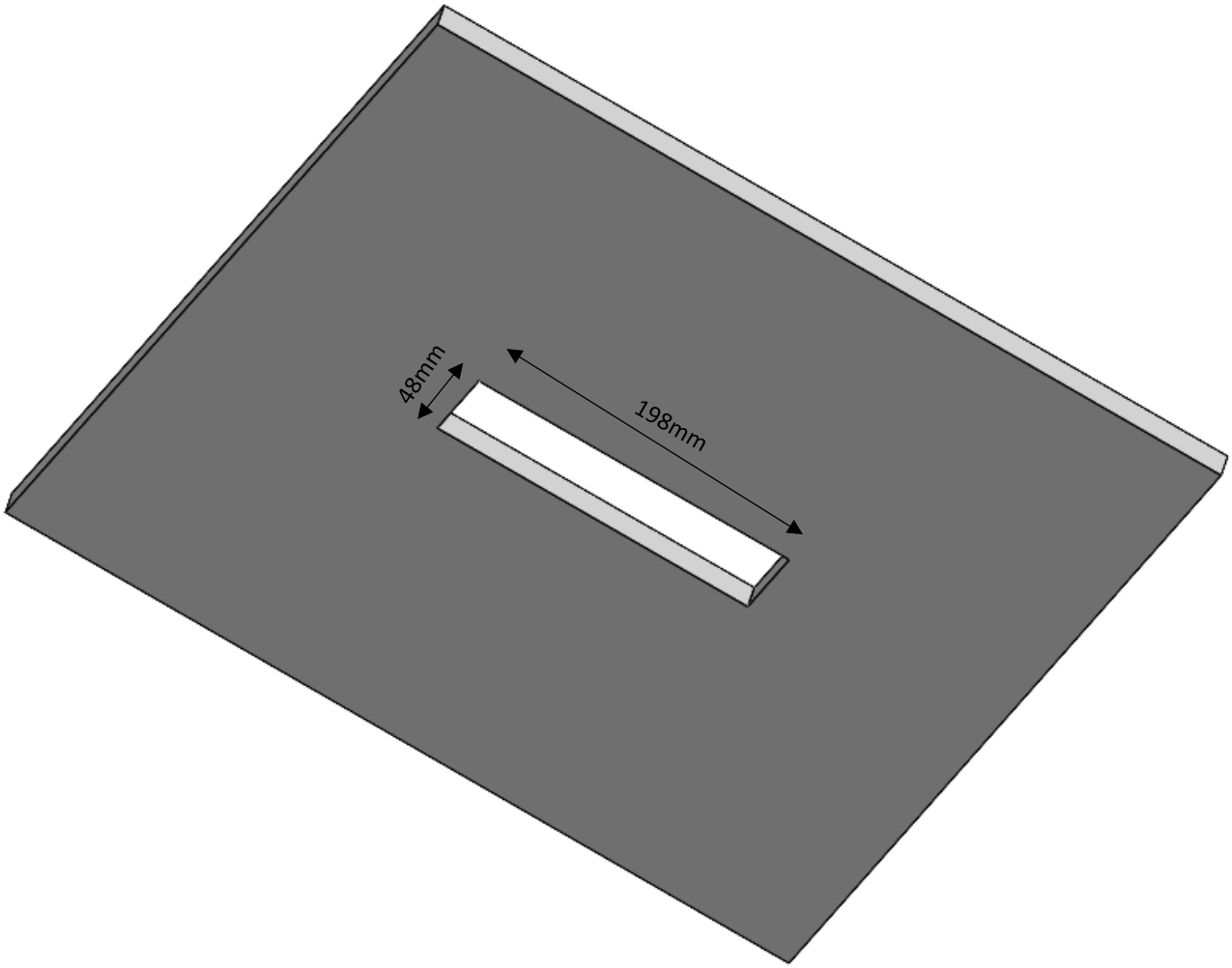

Step 2: Attach the trimless sheet to trimless frame with the help of screws as shown in below figure.

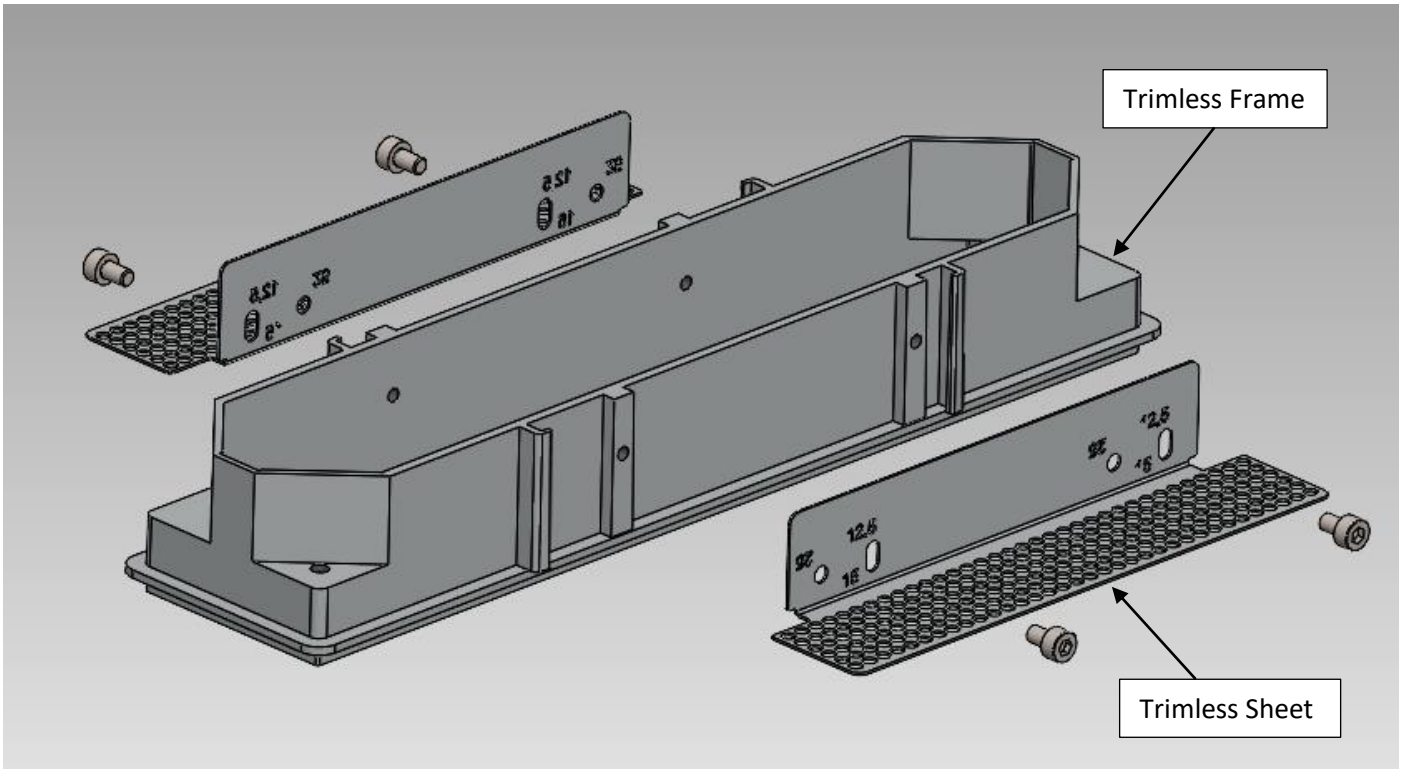

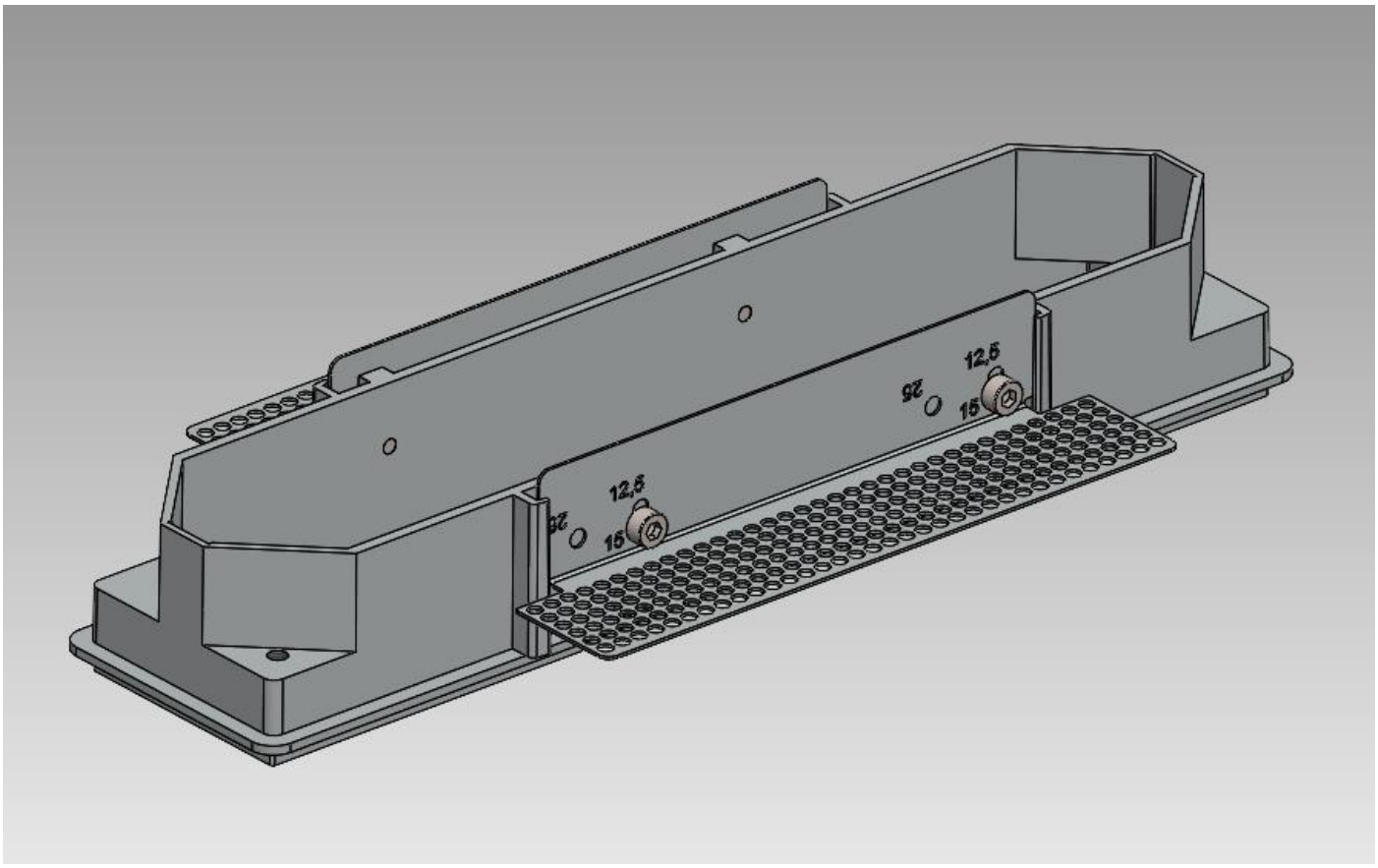

Step 3: Insert the trimless frame attached with trimless sheet in cut out by tilting such that the base of trimless frame should be at the same level as the POP.

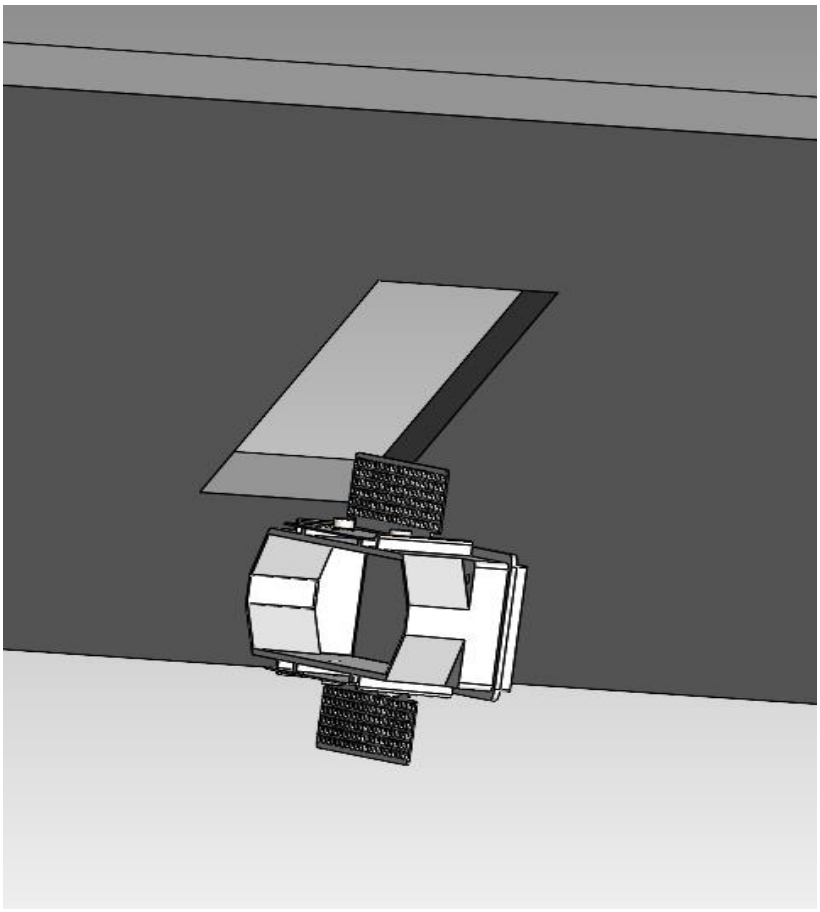

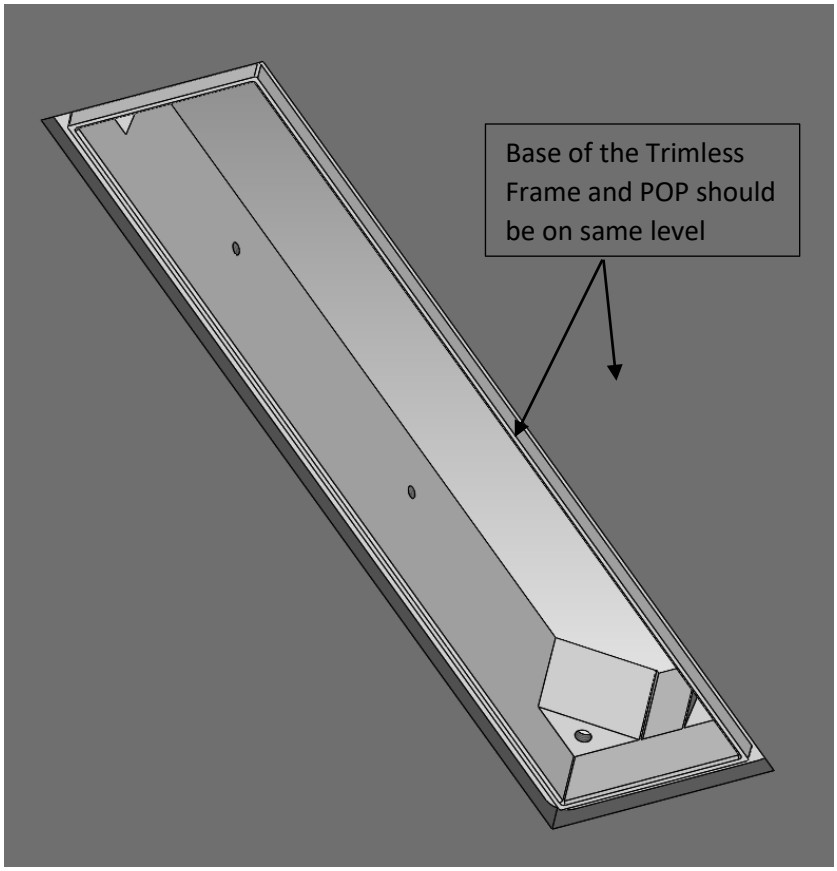

Step 4: Screw the POP ceiling to the trimless sheet to fix the trimless frame.

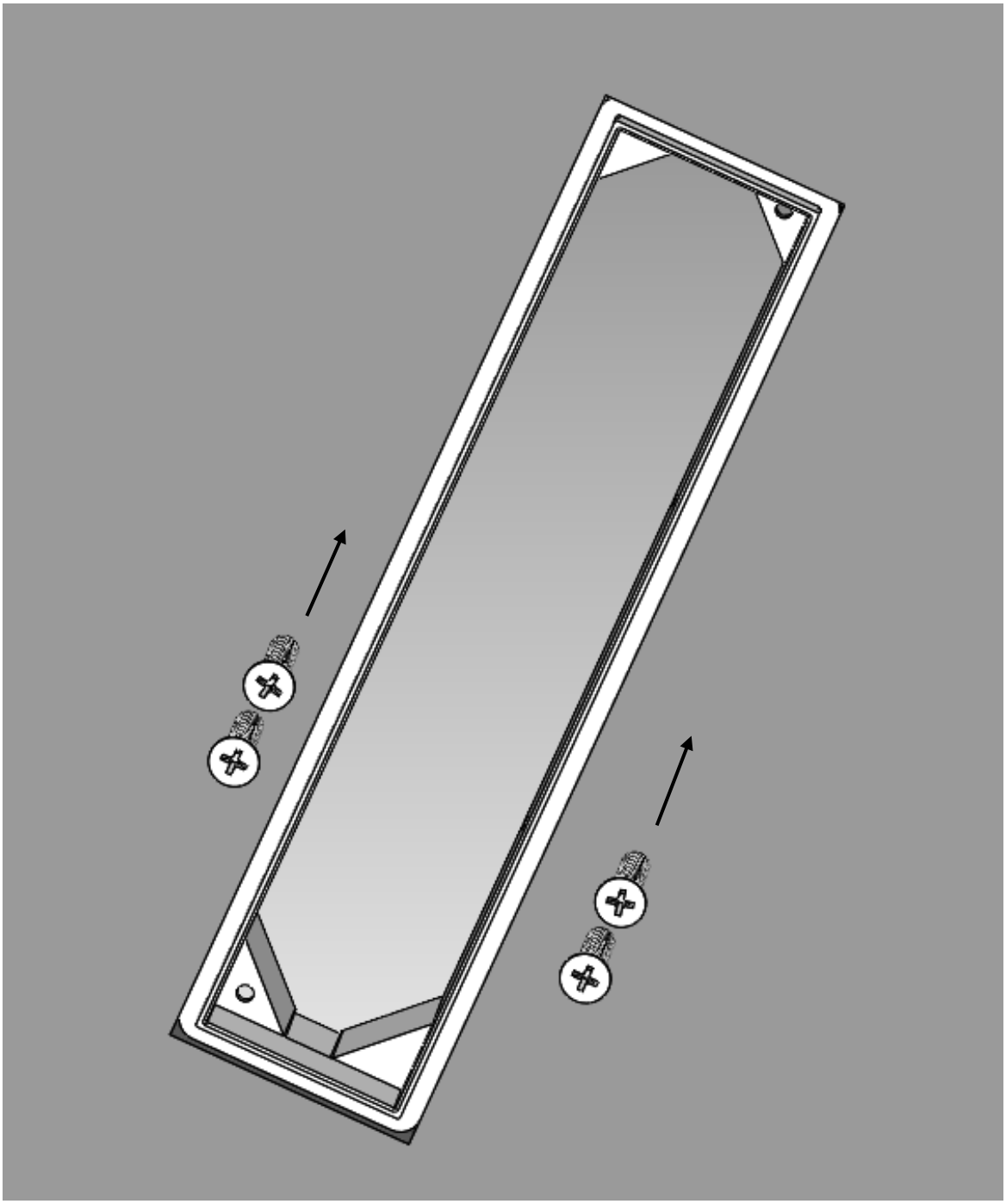

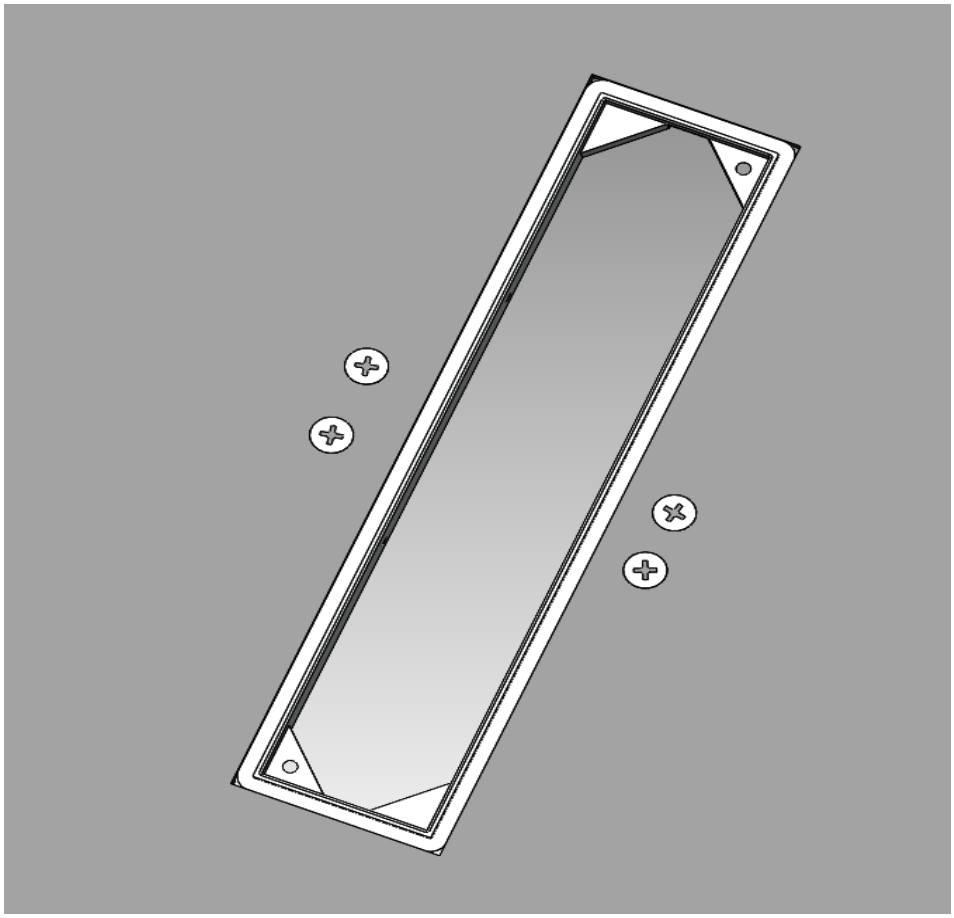

Front View

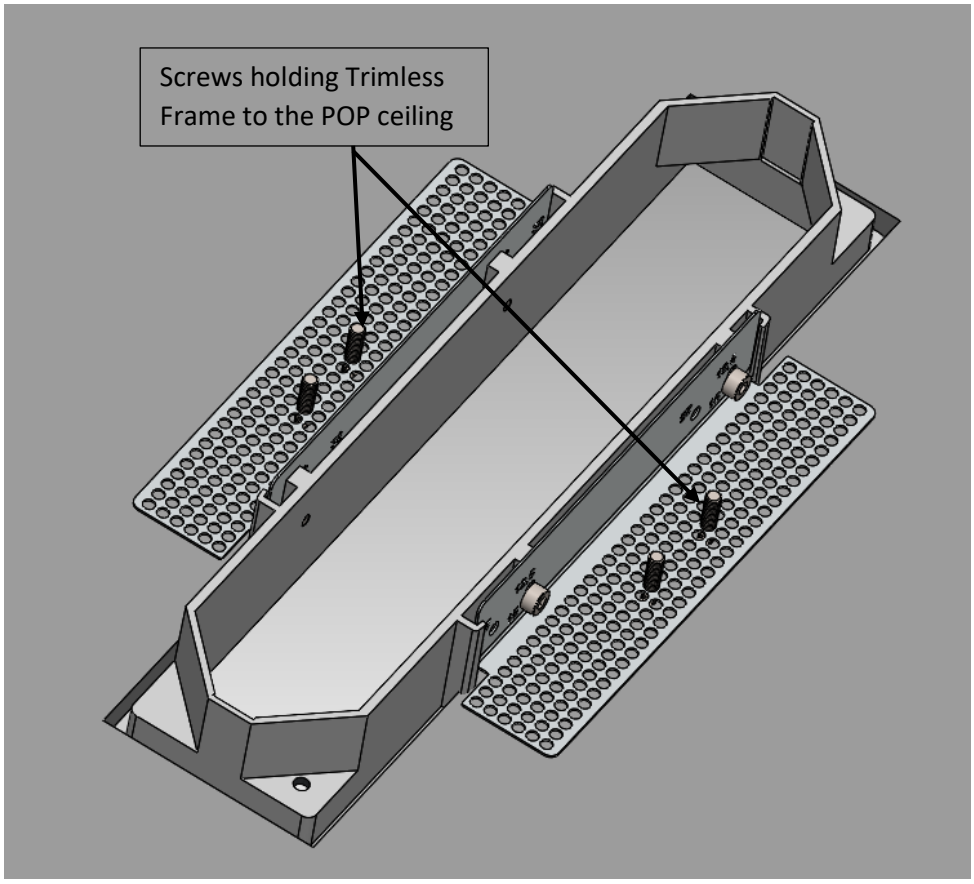

Rear View

Step 5: Finish the POP ceiling with Putti/POP. Fill the portion shown in sky blue colour with Putti and make sure putti doesn't goes into the inner side of trimless frame.

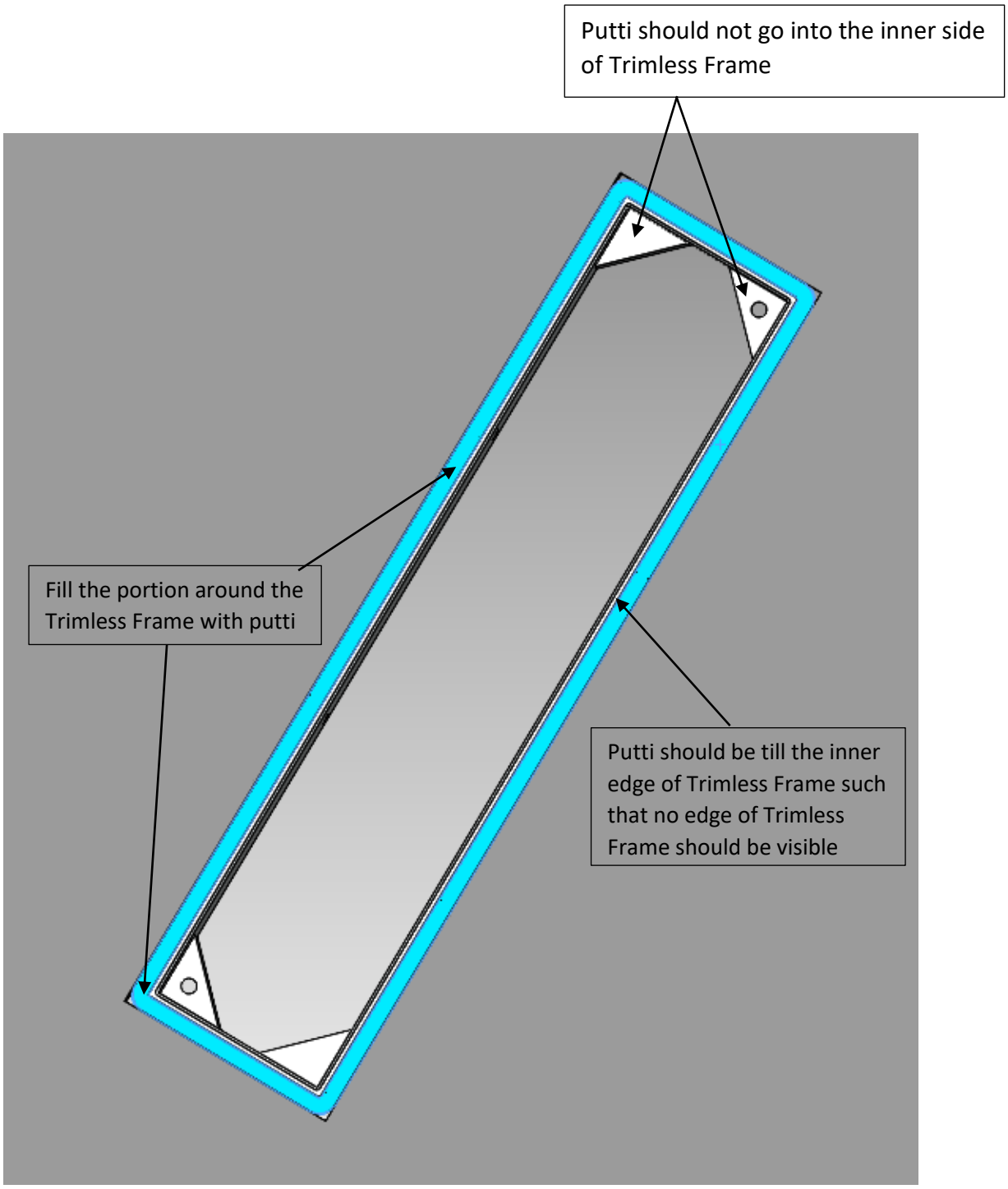

Step 6: Let the putti dry properly.

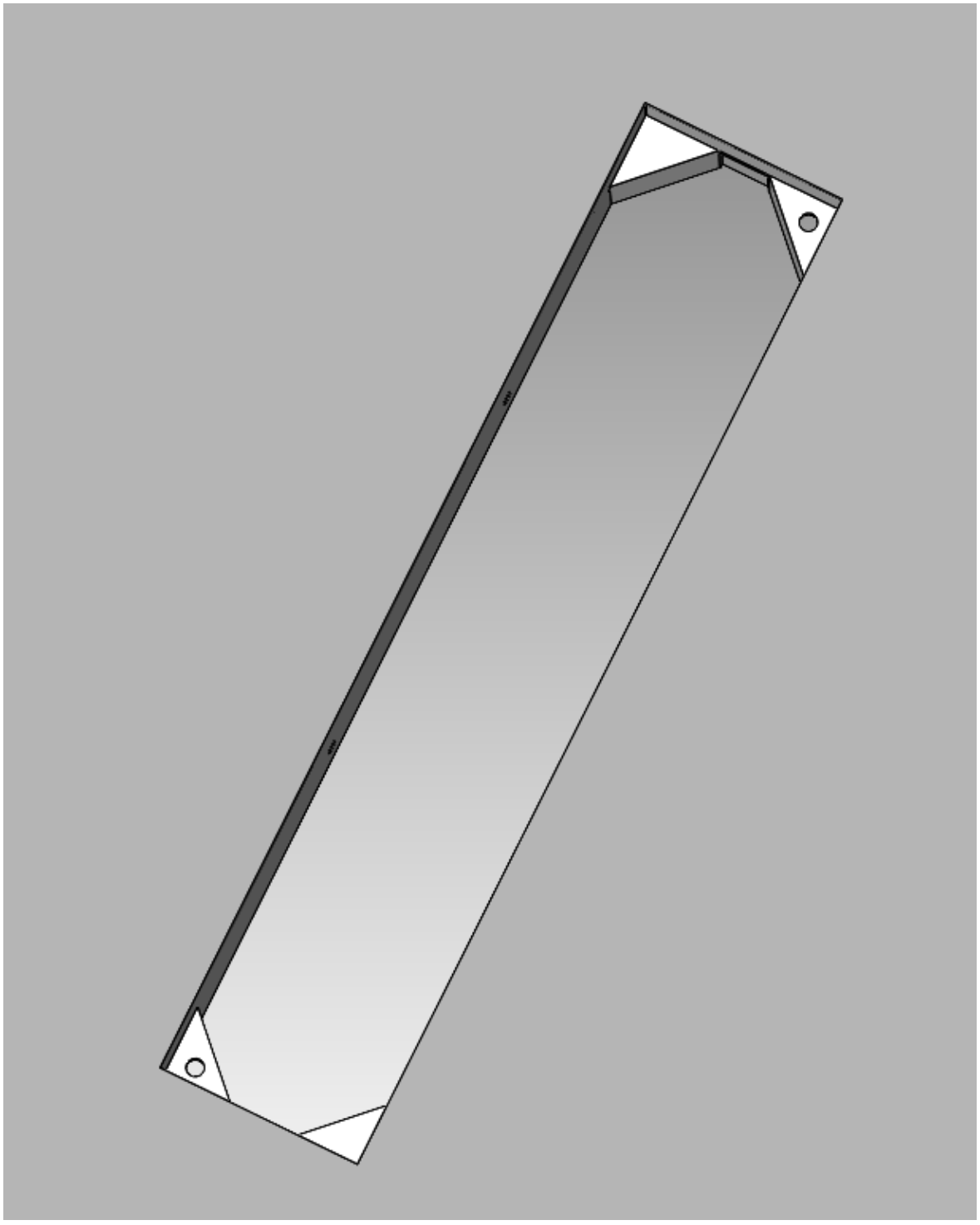

Step 7: Insert the driver through the trimless frame and connect the fixture with driver with the help of quick connectors attached to the wires of driver and fixture, then screw the fixture to the trimless frame.

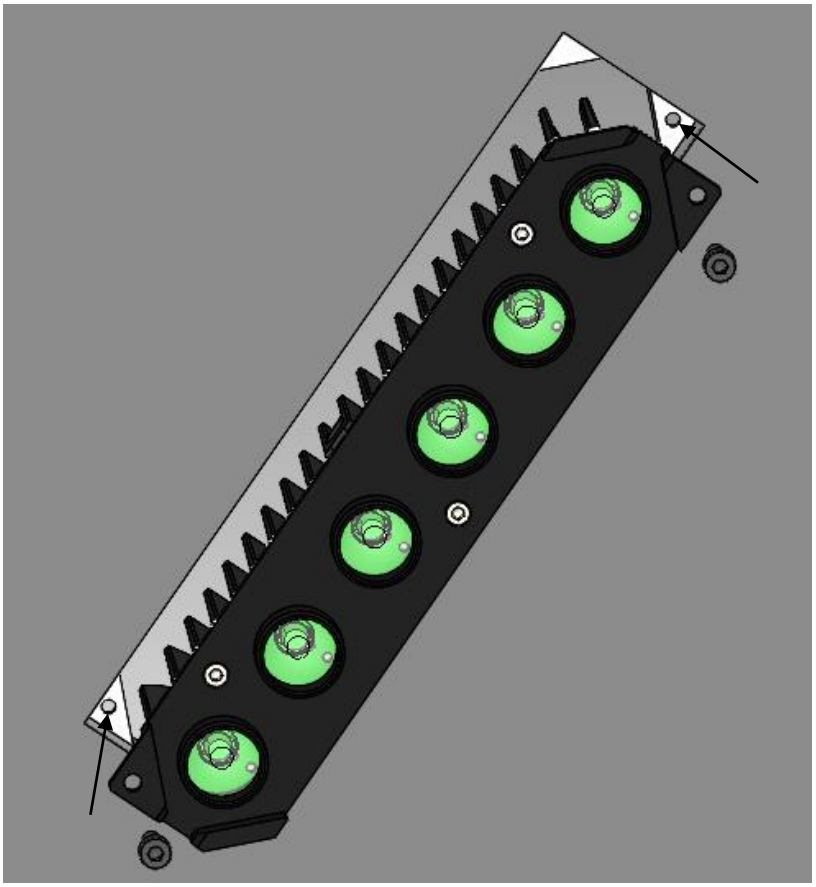

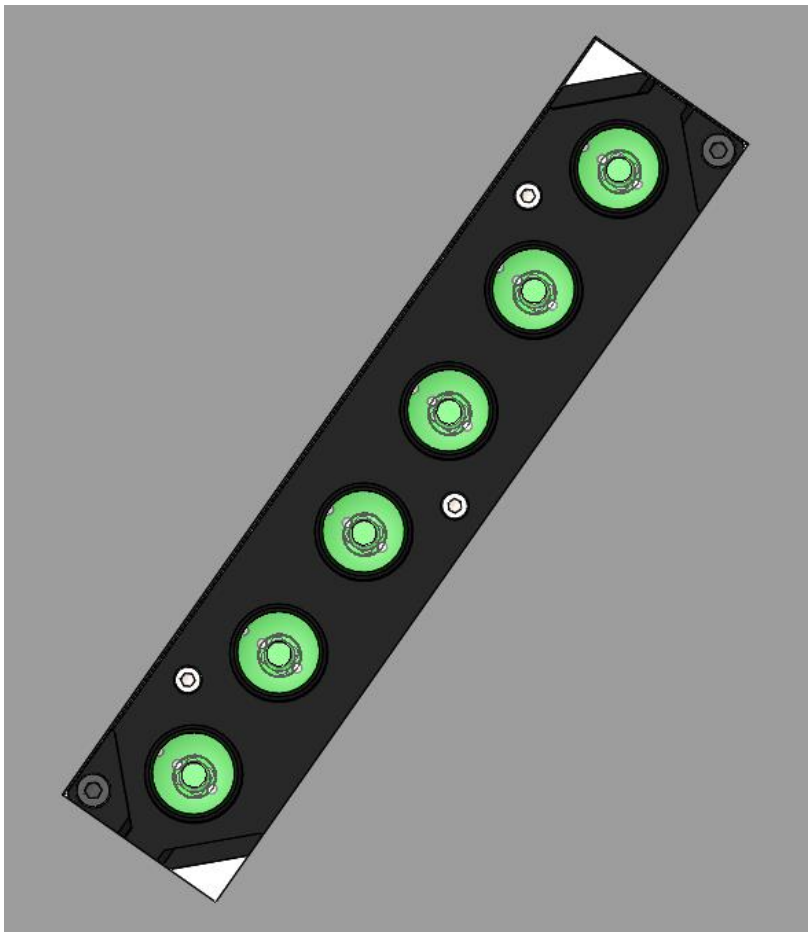

Step 8: Now fit the Zona Inline 6X Square Facia in the fixture which is made to be snap fit.

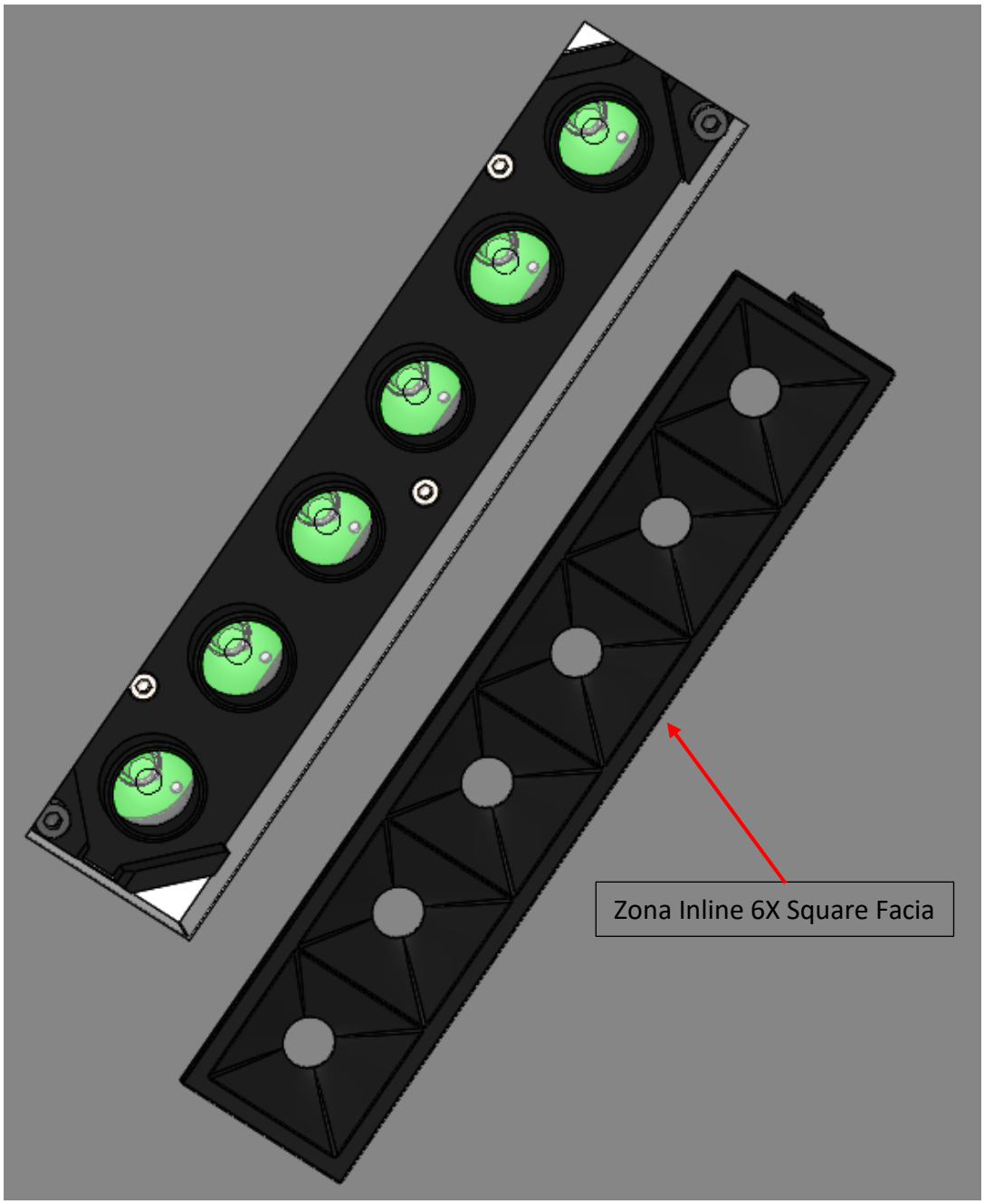

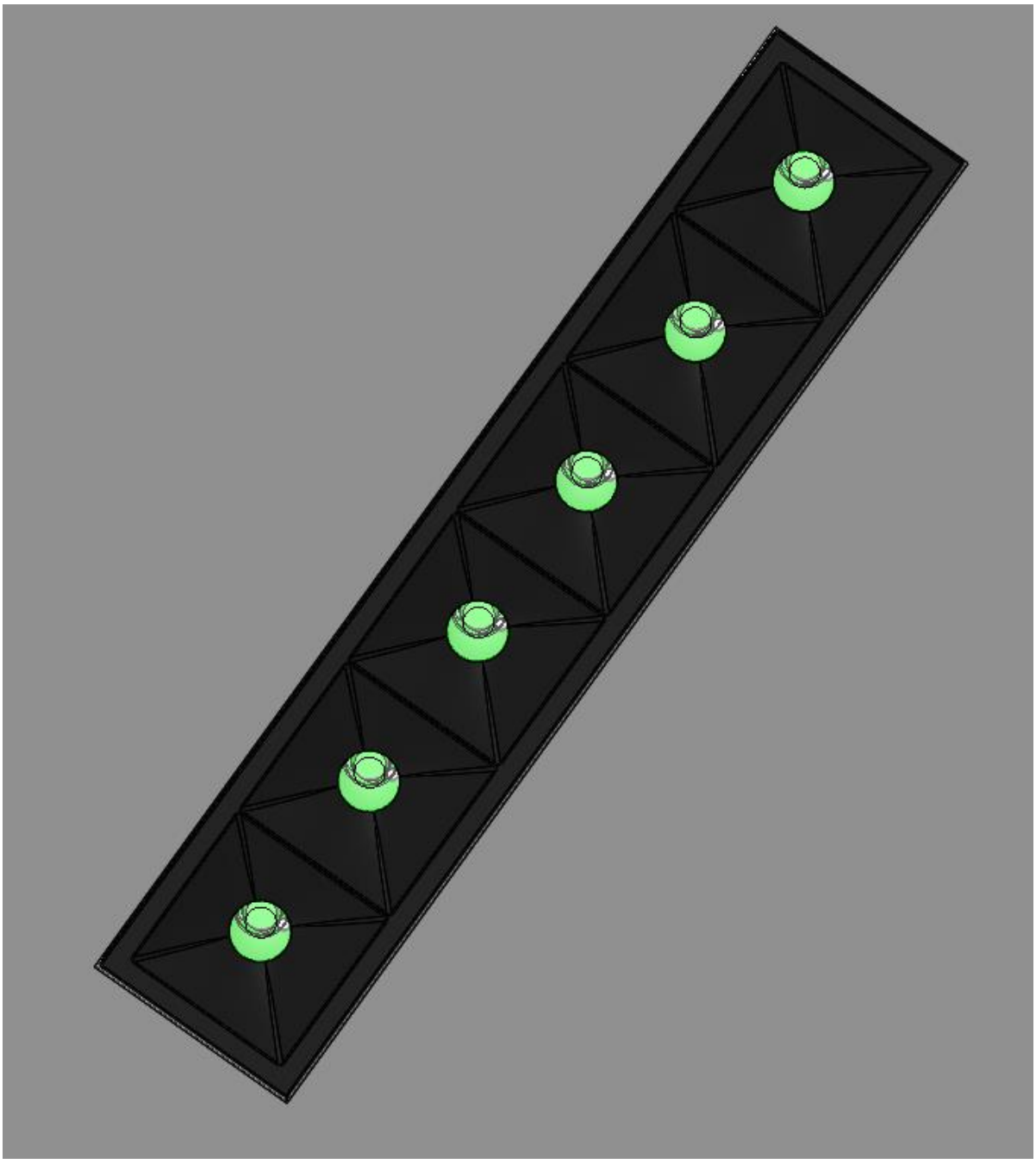

Installation is complete. Lights can be Turned On!