Dolmen Stack_2x- Installation Manual

Step 1: To make a concrete foundation as shown in Fig 1. Take the dimensions of the bolt and conduit pipe from Fig 1.

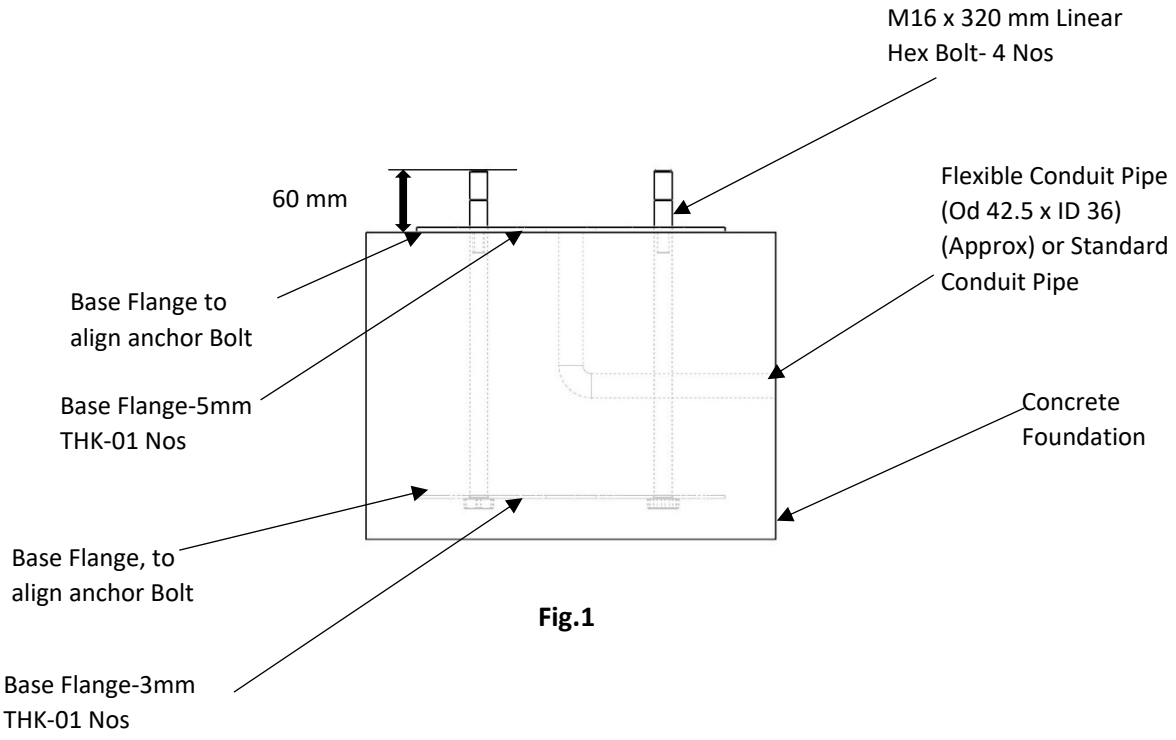

Fig.1

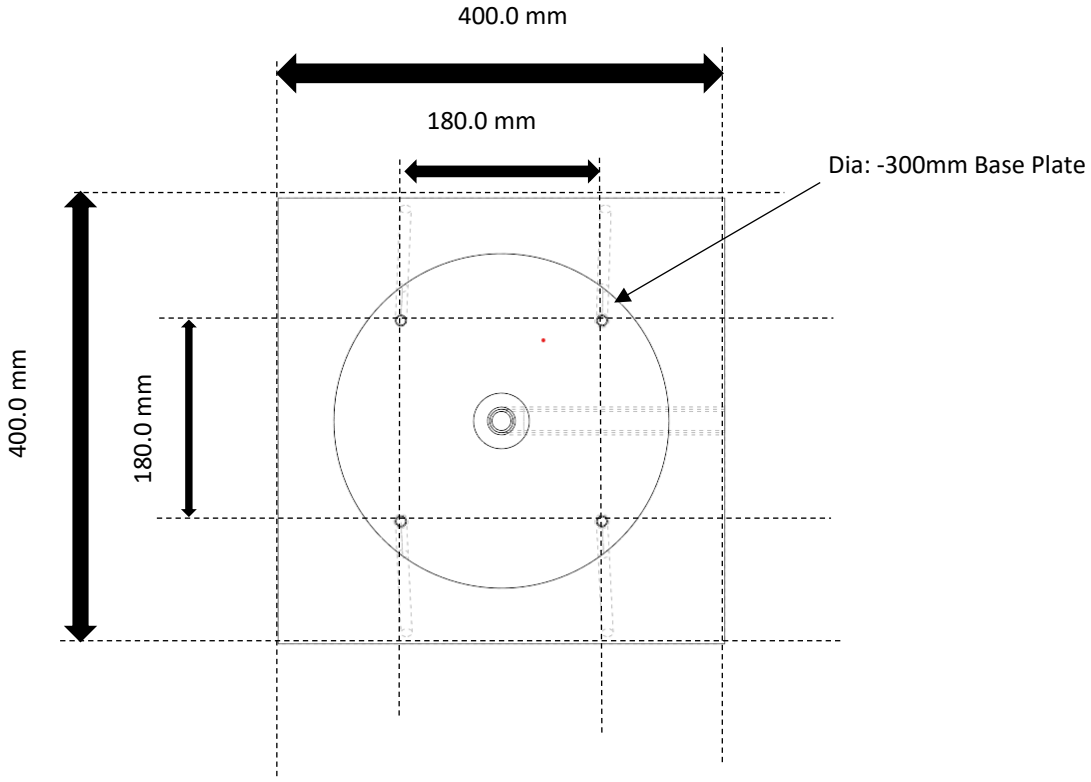

Fig.2

Step 2: Fit With M16 nut on Base Plate as per Fig.

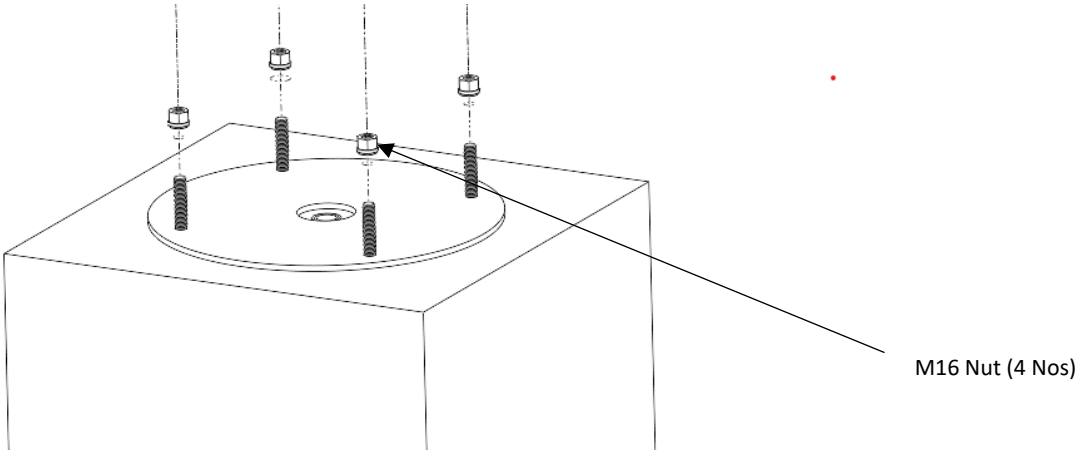

Fig.3

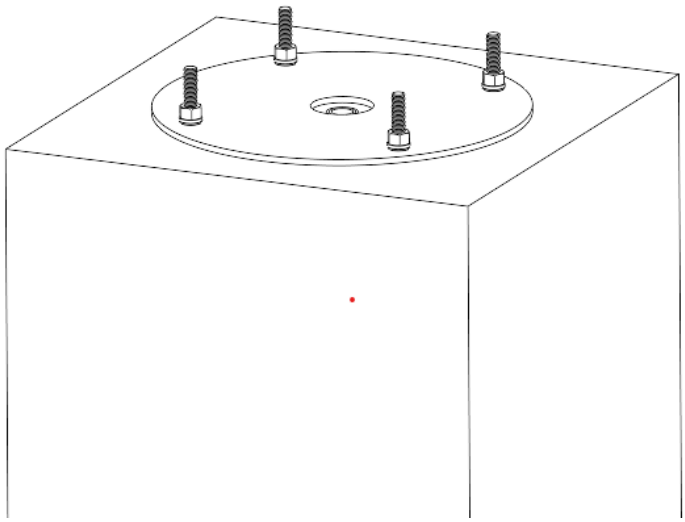

Fig.4

Step3 : Fix the Pole above the base place and adjust the nuts for Pole alignment and check with the spirit level & then tighten the above M16 nuts.

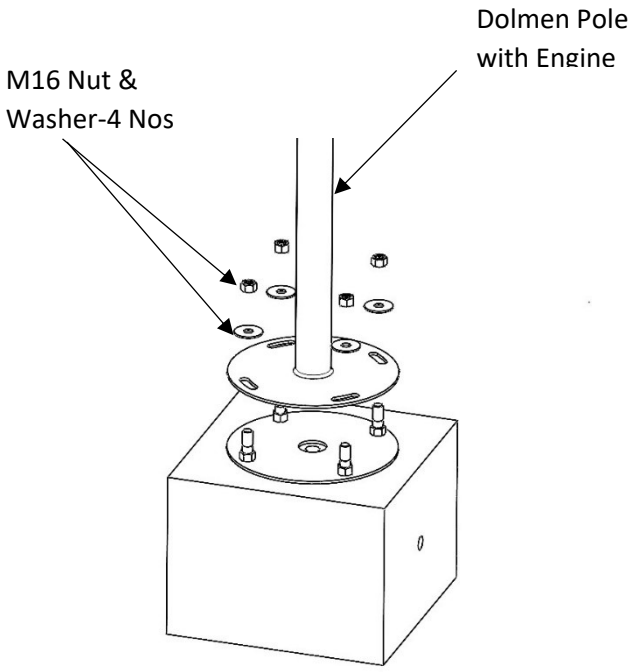

Fig.5

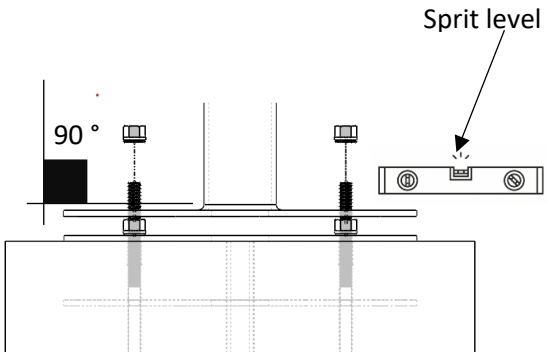

Fig.6

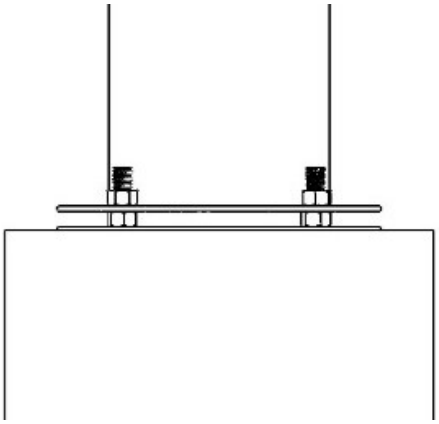

Fig.7

Step4 : Dolmen Stack_Decorative flange Assembly part assembled with Pole with the help of M6 x 12 CSK Screw as Indicated.

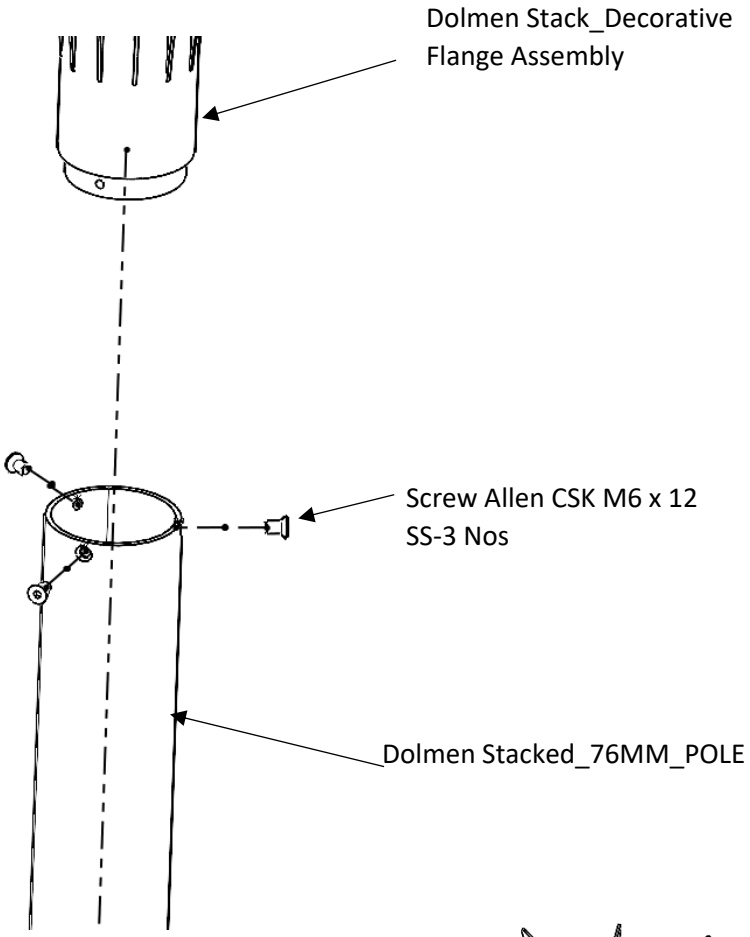

Fig.8

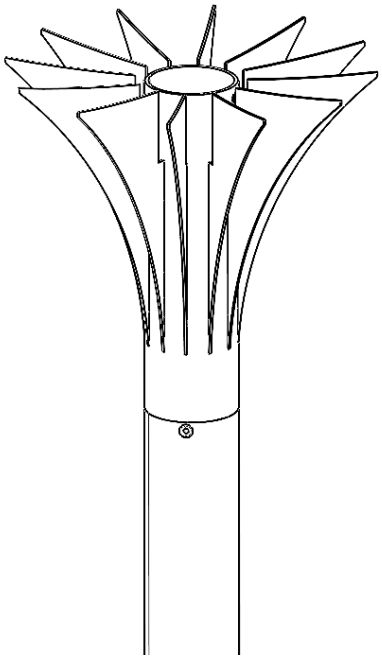

Fig:9

Step5 : Dolmen 2X Head assembly fix with the help of grub screw as per indication in the figure.

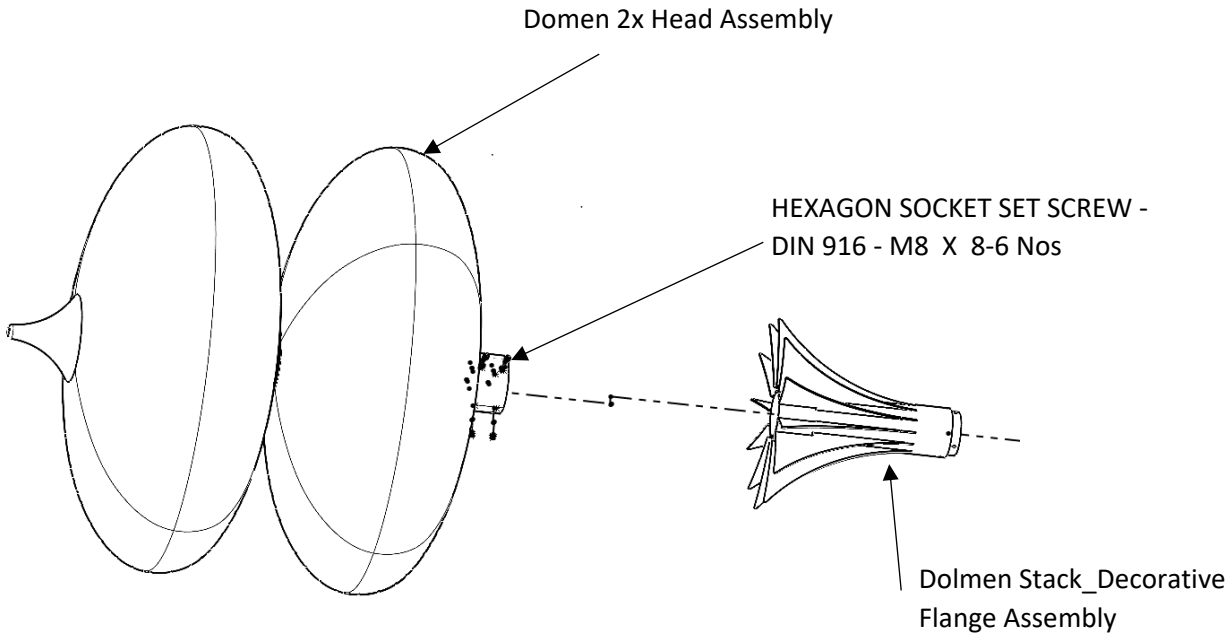

Fig:10

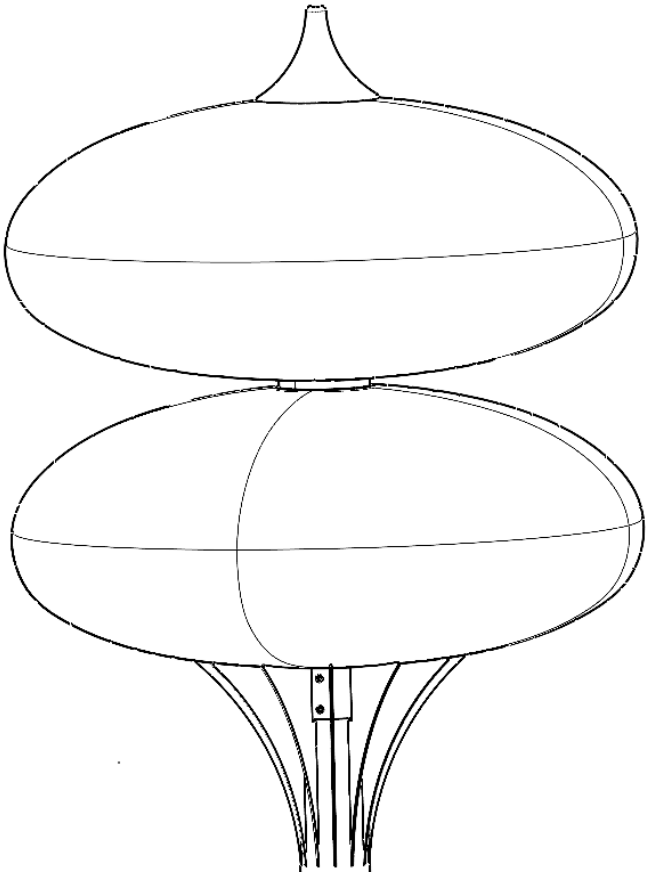

Fig:11

Installation is complete. Lights can be Turned On!

