Dolmen Head with Column INSTALLATION MANUAL

Step 1: Make Three Drill hole in concrete at M10 Anchor Bolt fit at 370 mm PCD (M10x50mm).

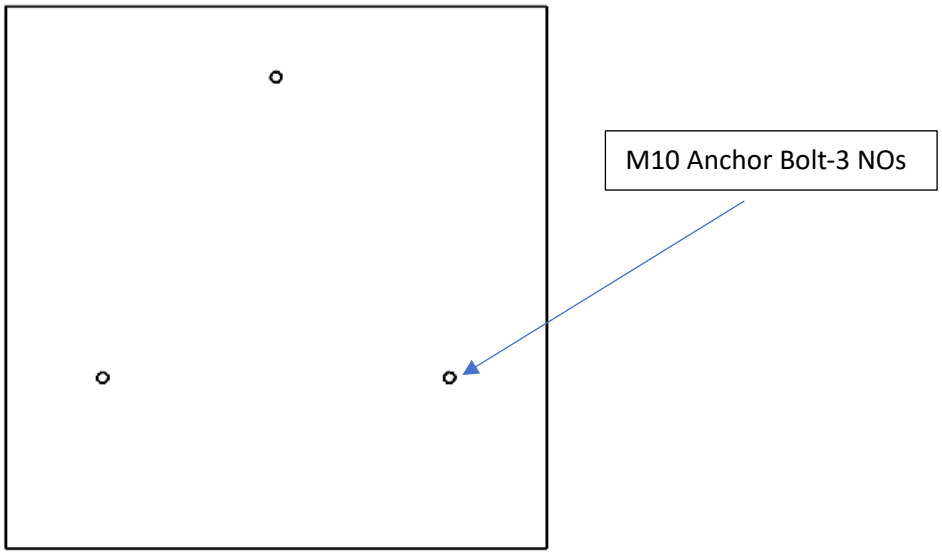

Step 2: Positioning the wire packing piece on hole.

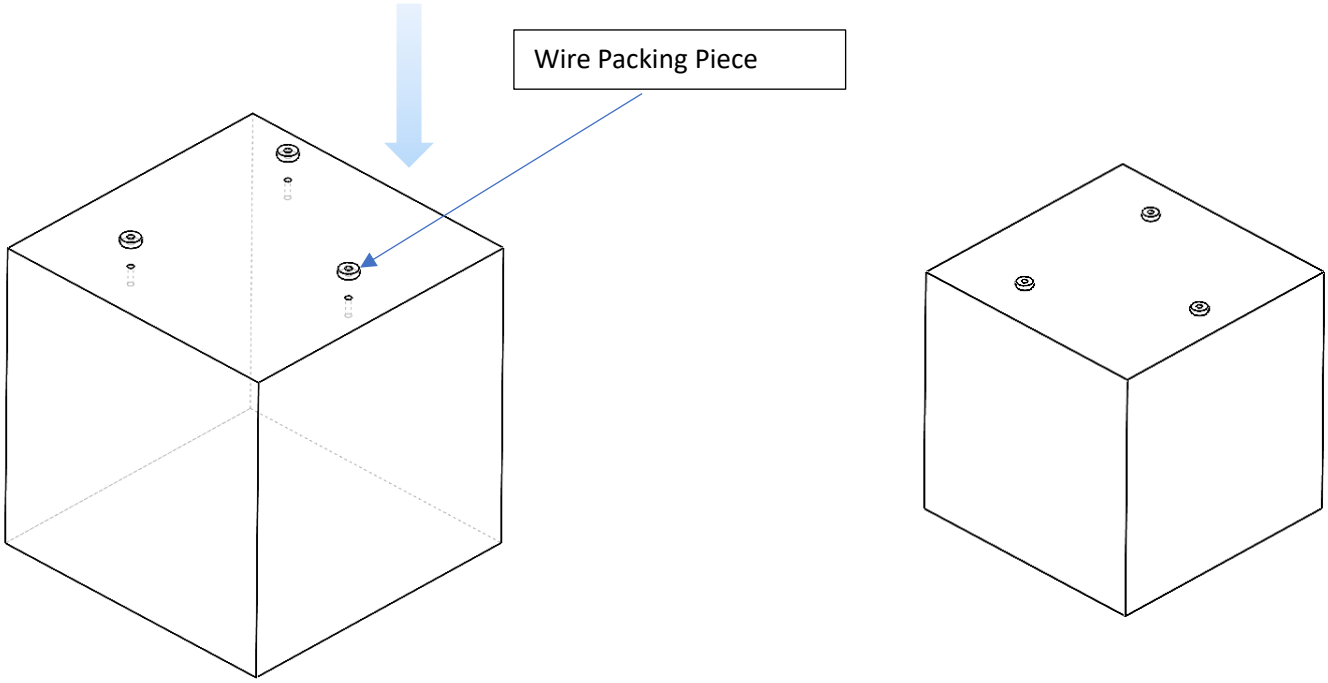

Step 3: Align Full fixture on Wire Packing Piece.

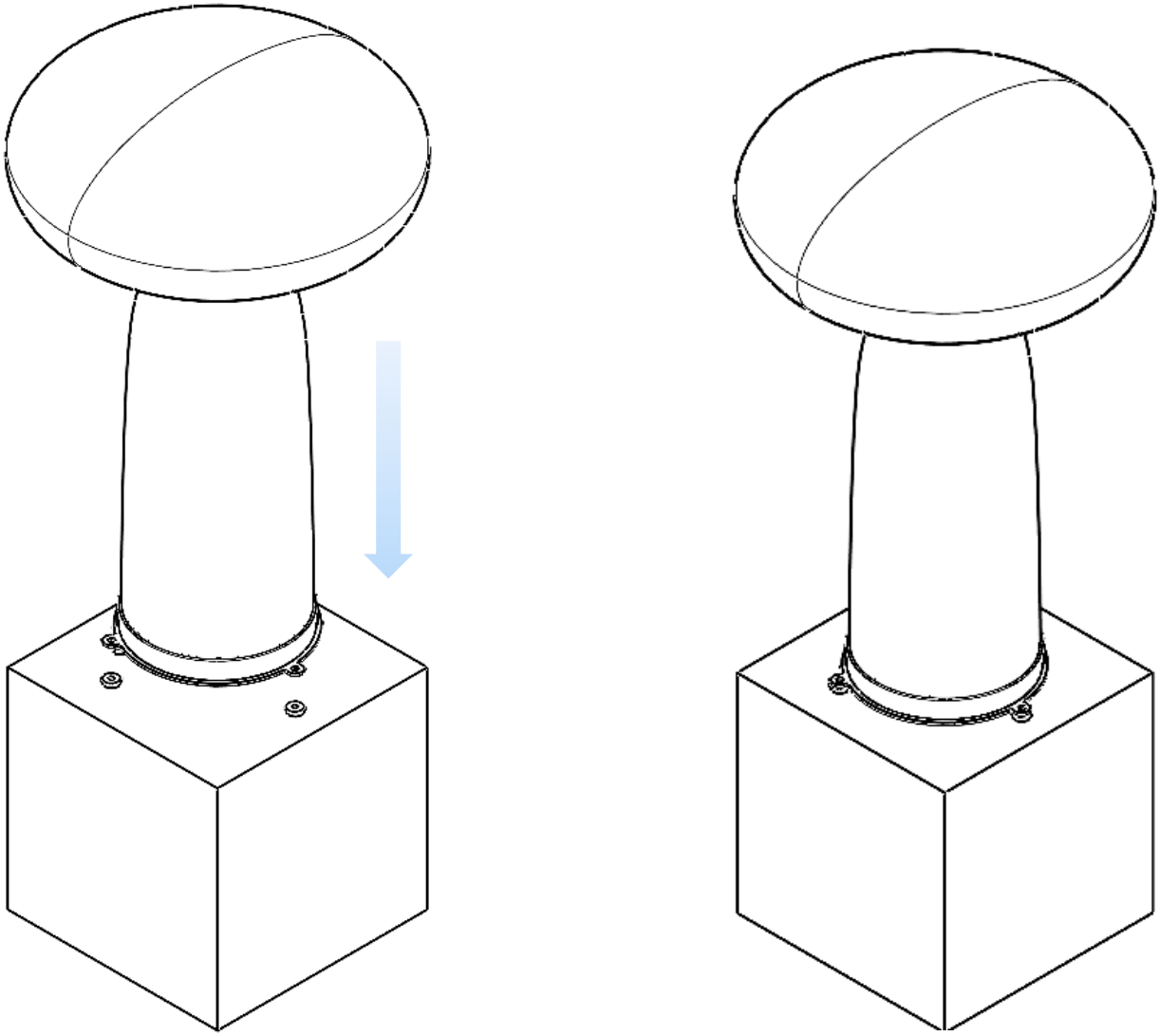

Step 4: Align the Column Finishing Cap Mounting Ring & Column Mounting Disc

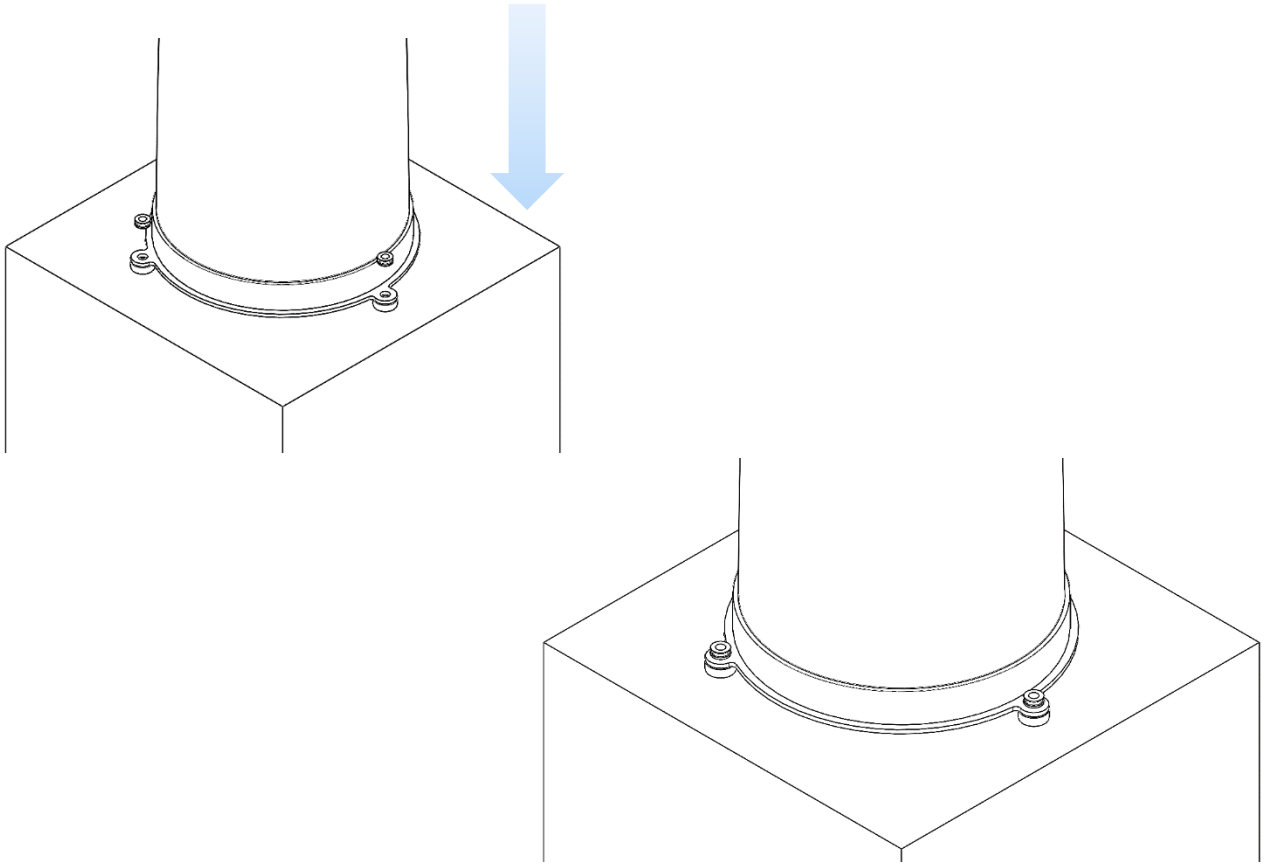

Step 5: Insert M10 Anchor Bolt on the Column Finishing Cap Mounting Ring.

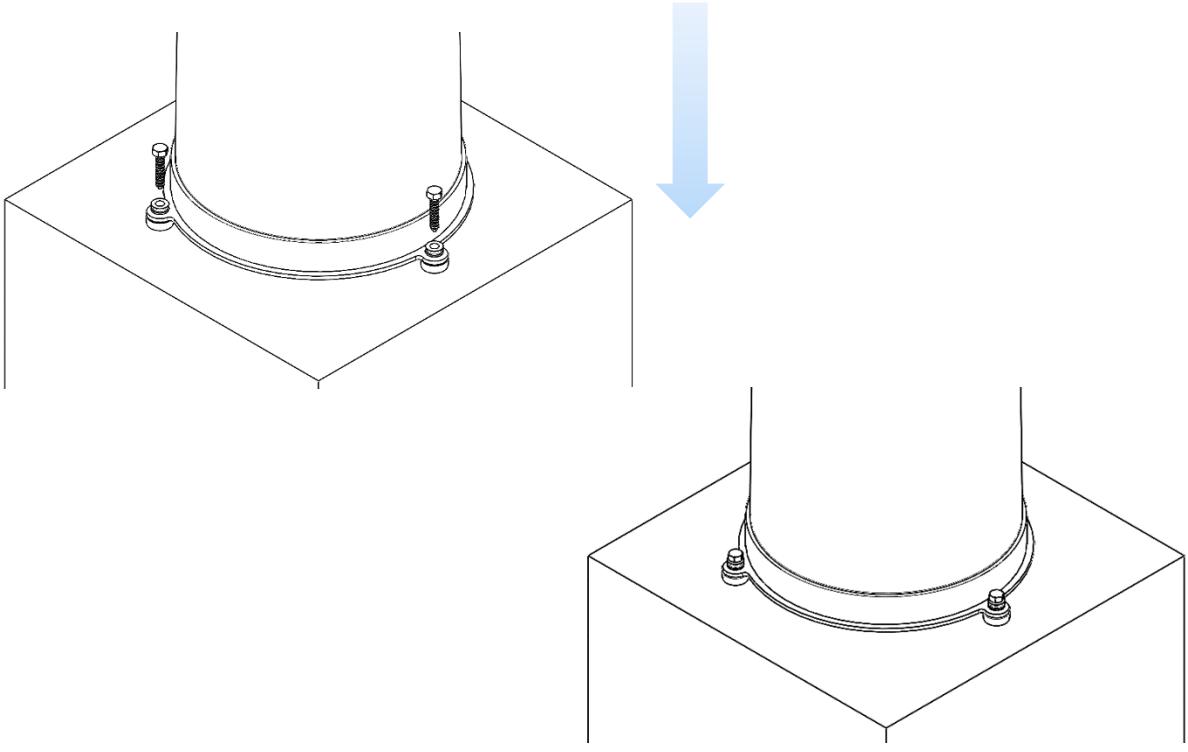

Step 6: Insert Column Finishing Cap on Anchor Bolt Head for Closing.

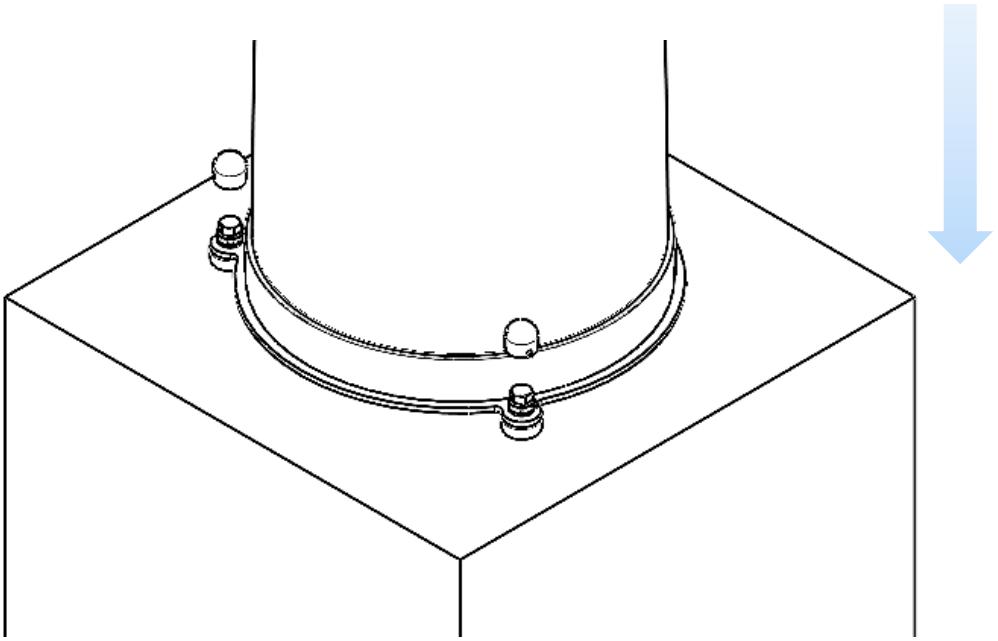

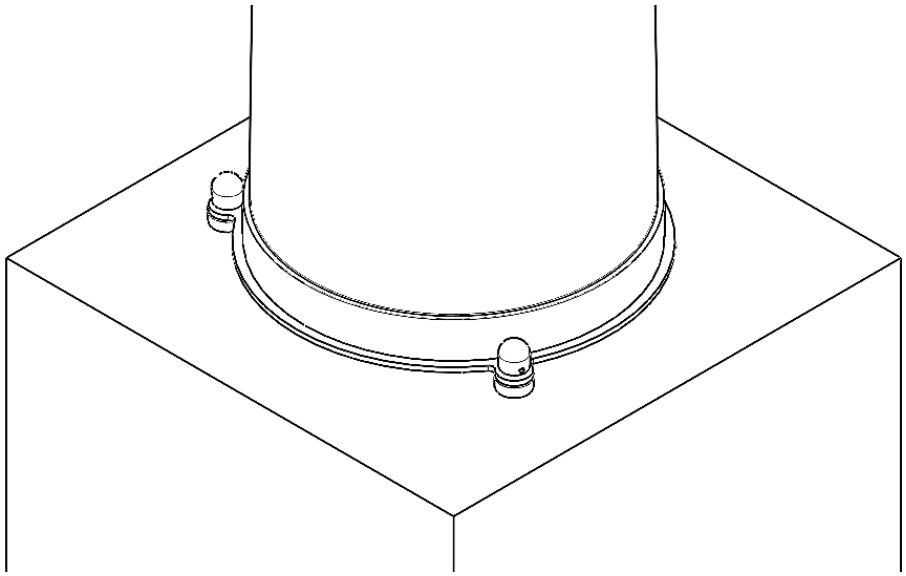

Step 7: Insert the grub screw in column finishing Cap.

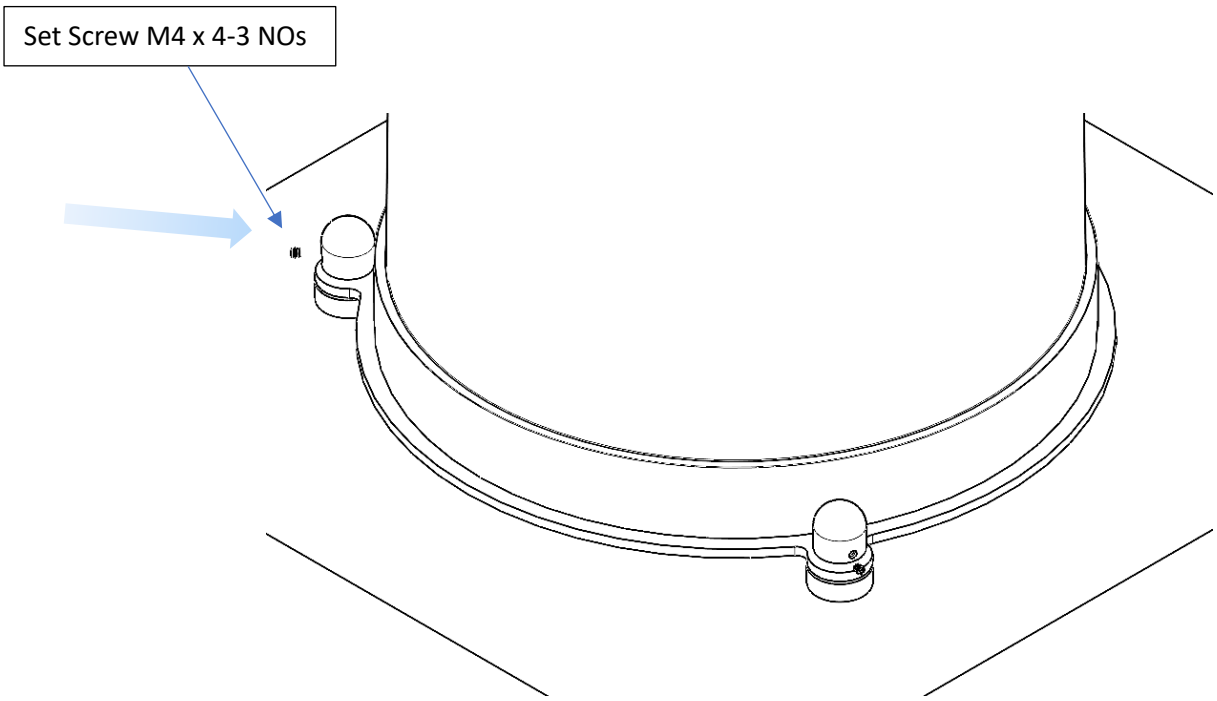

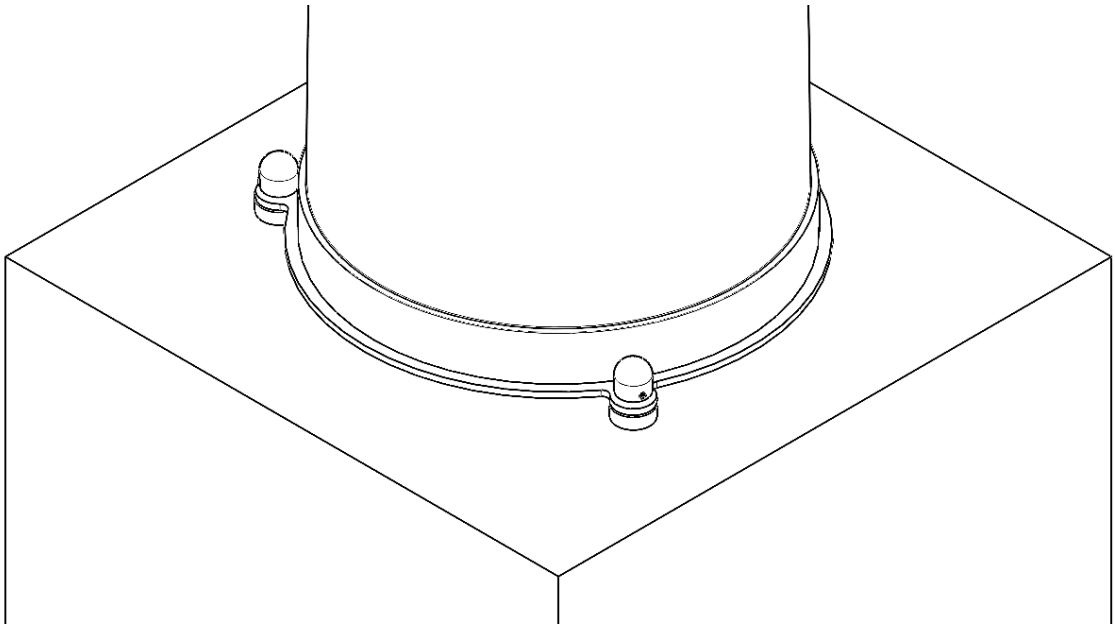

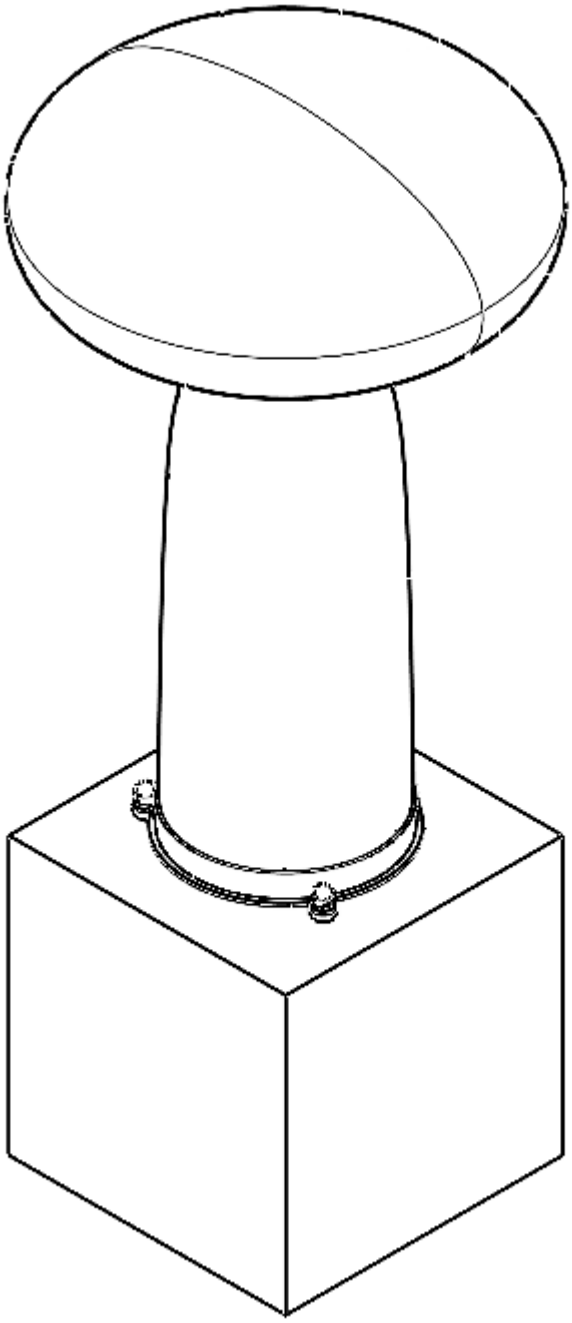

Installation completed. The lights can be turned on!