ZONA PERDU 4X TRIMLESS INSTALLATION MANUAL

Step 1: Make a cut out of SQ 83mm x 83mm in the ceiling as shown in below figure.

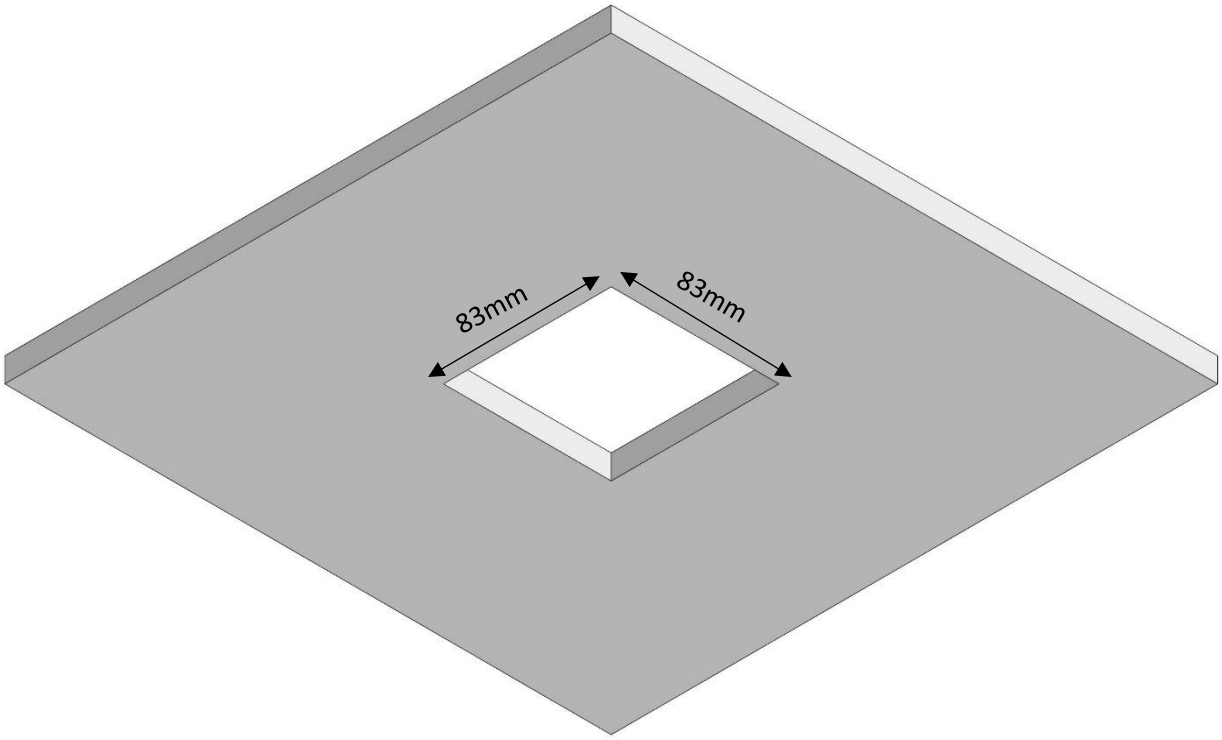

Step 2: Attach the Trimless Plate to the Housing with the help of screws as shown in the figure below.

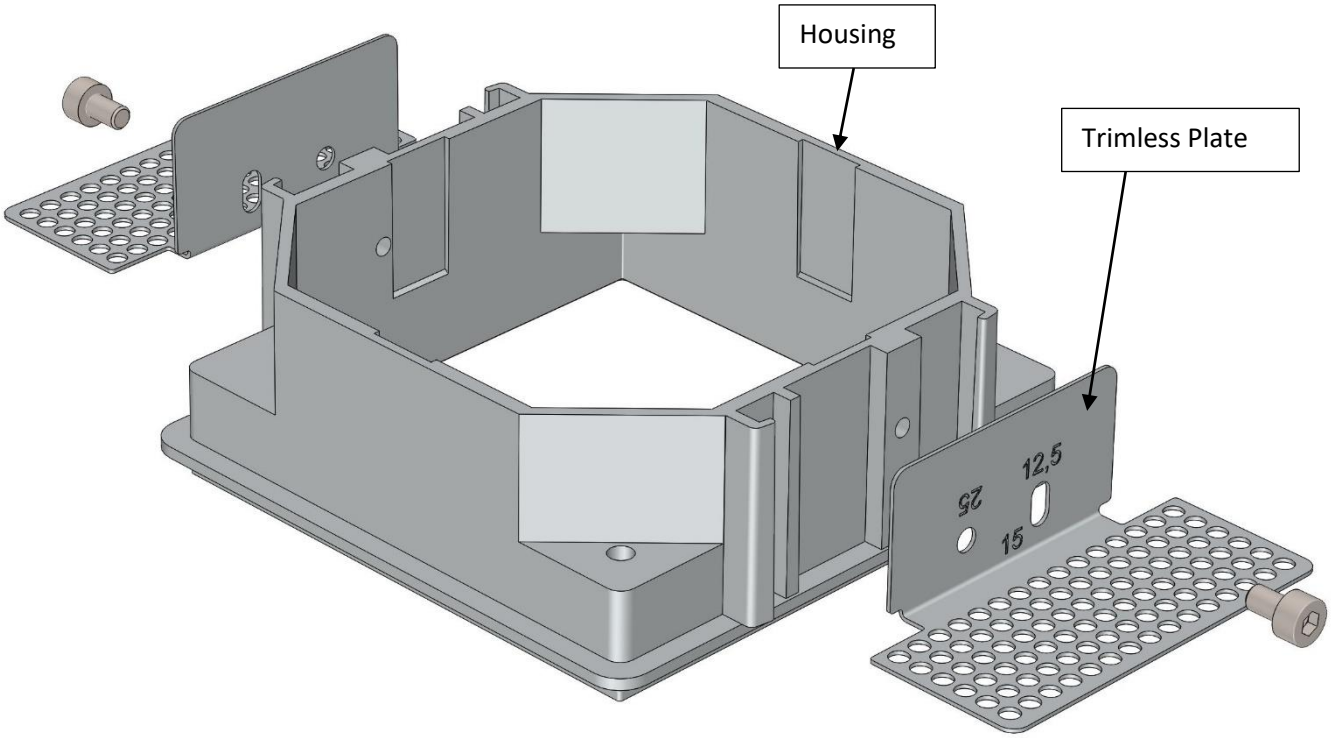

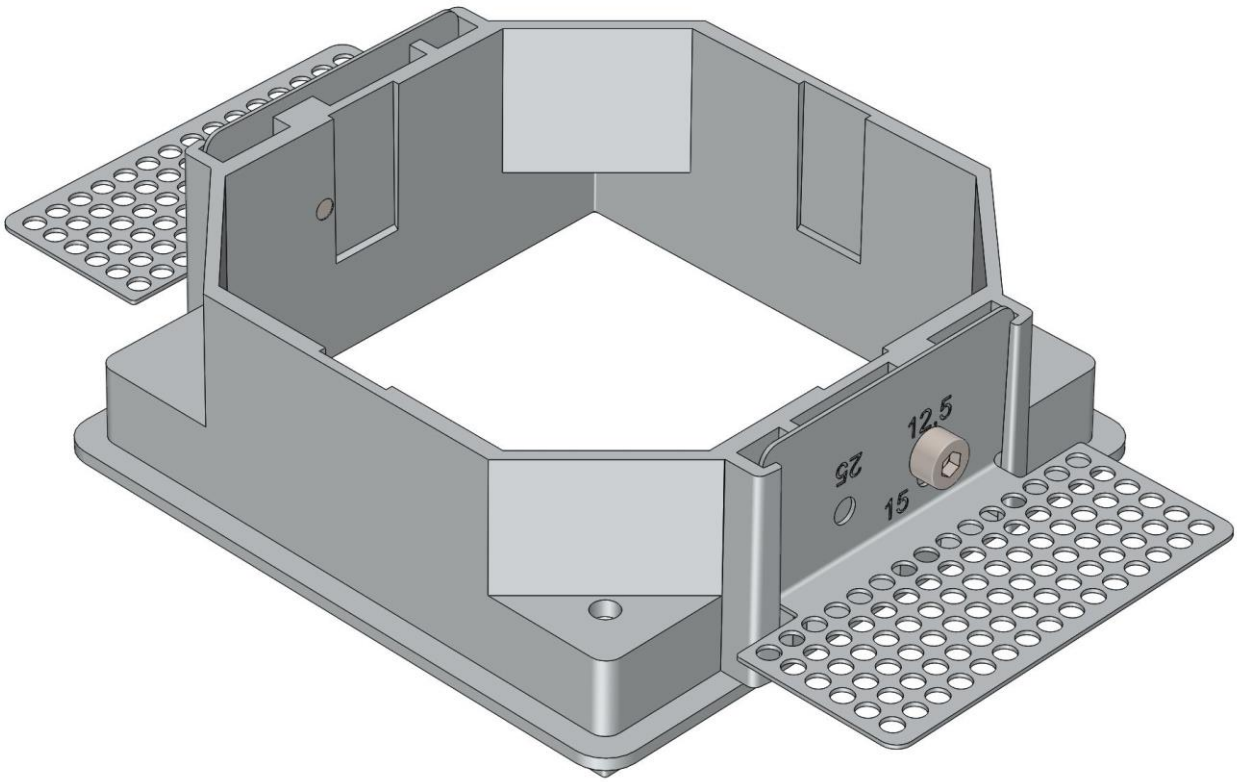

Step 3: Insert the Housing attached with the Trimless plate in the cut out by tilting such that the base of housing should be at the same level as the POP.

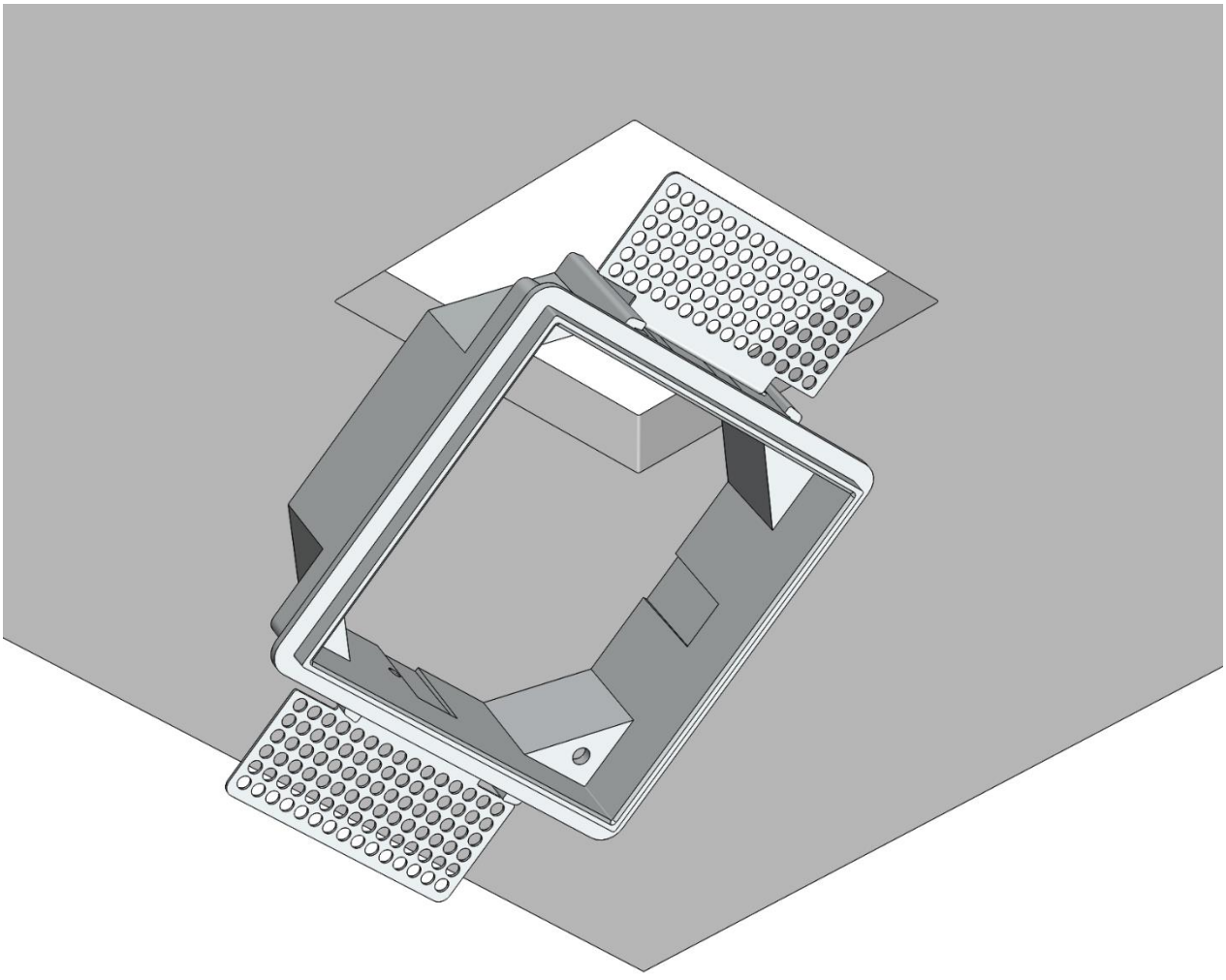

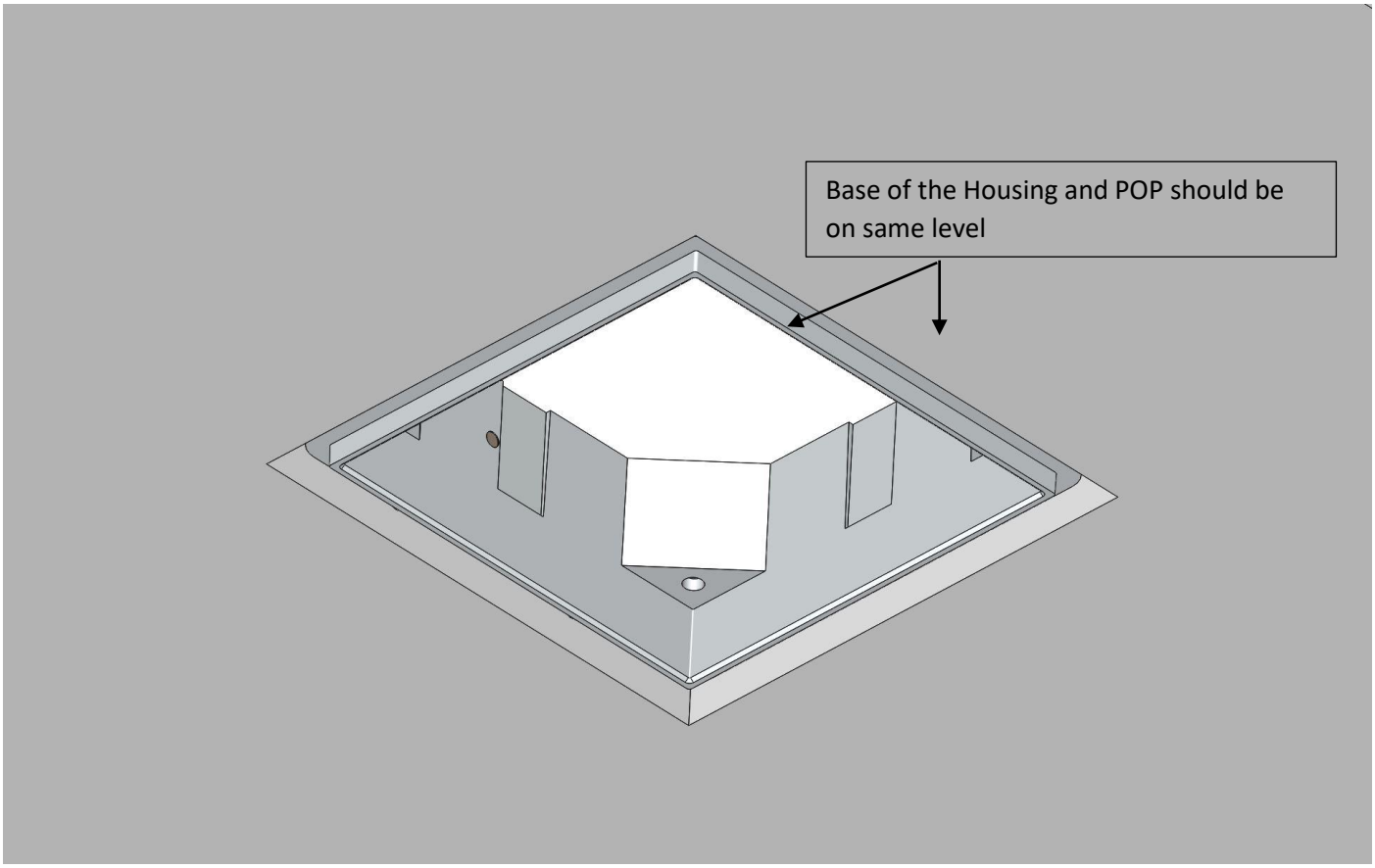

Step 4: Screw the POP ceiling to the trimless plate to fix the housing.

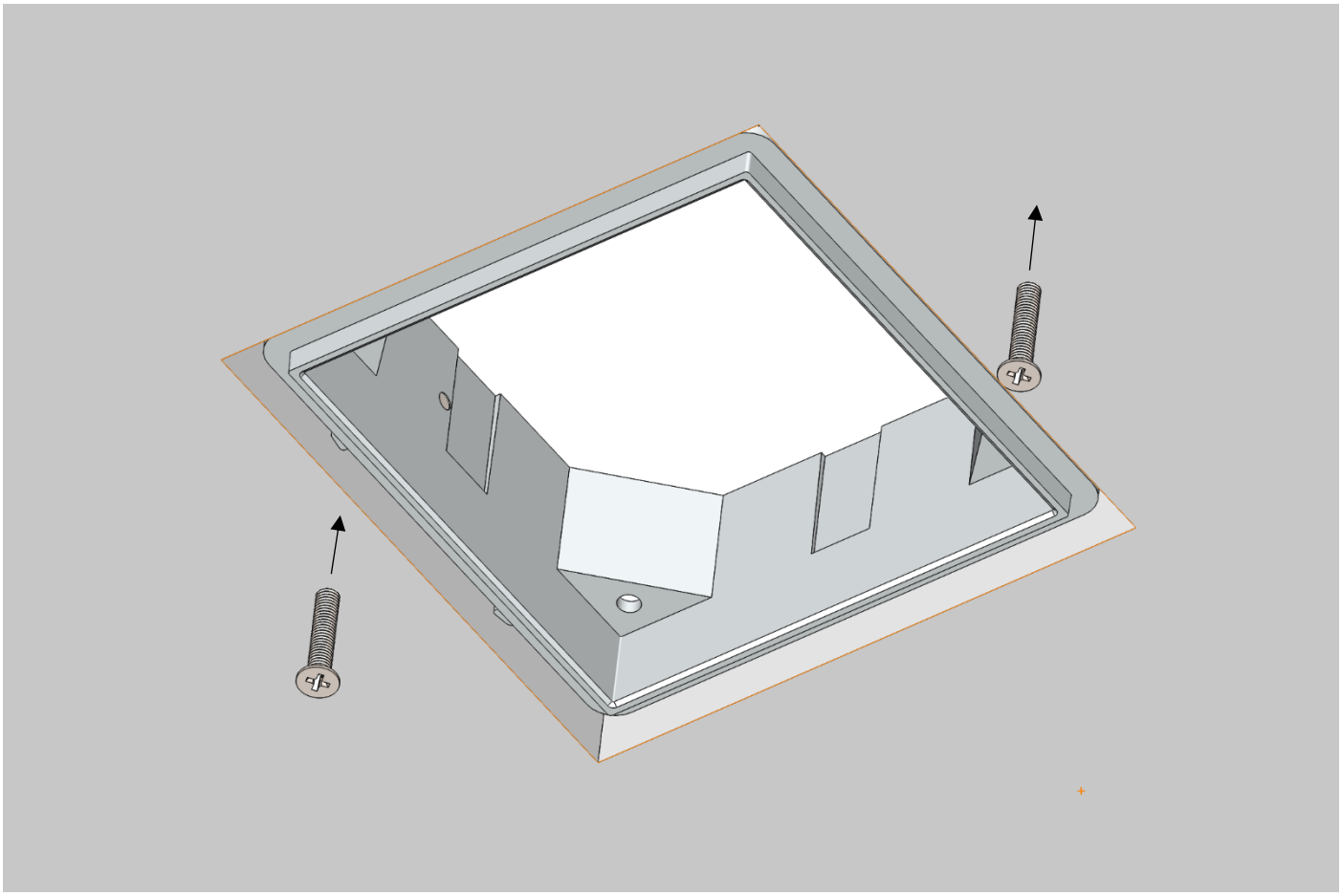

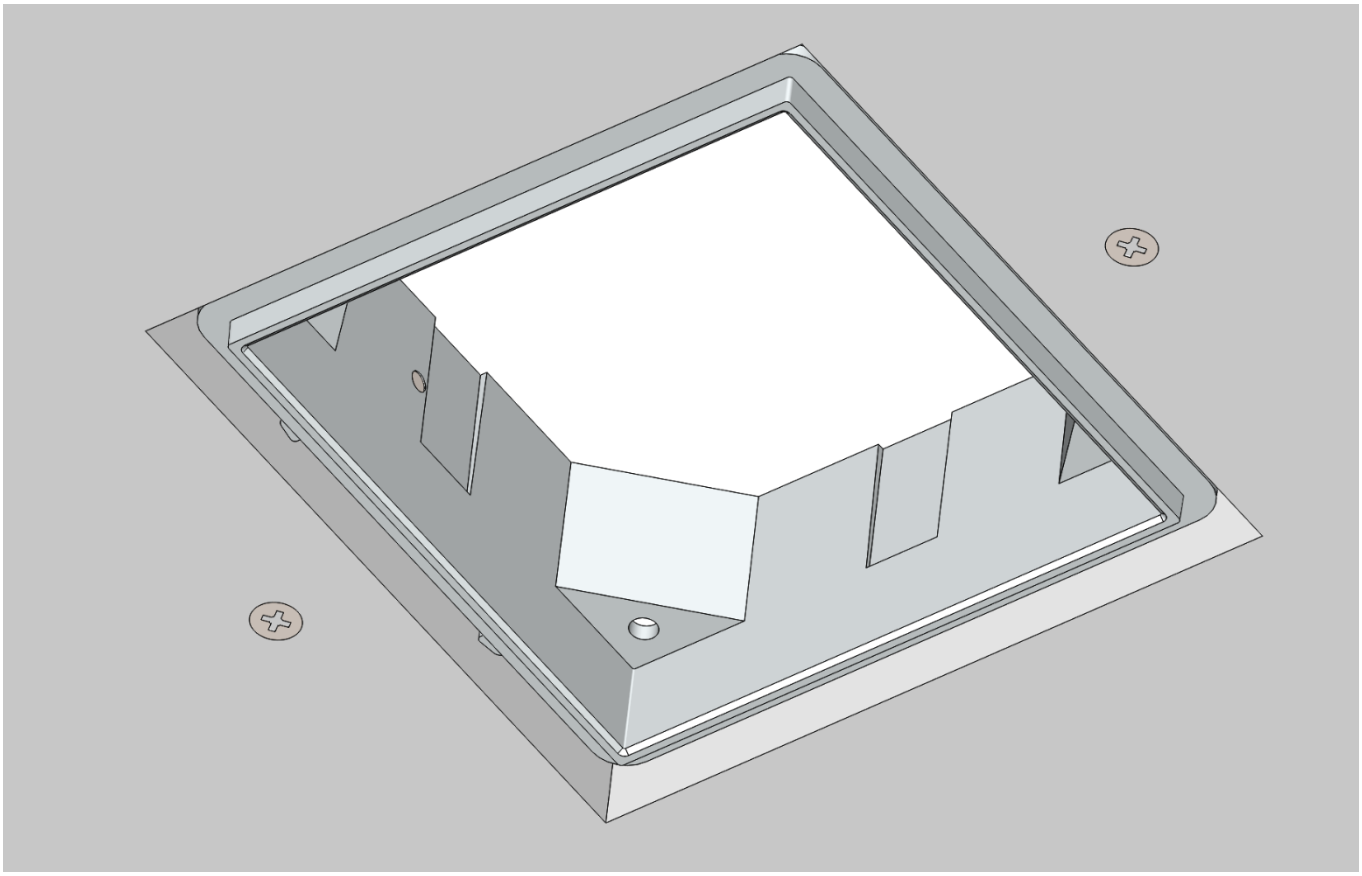

Front View

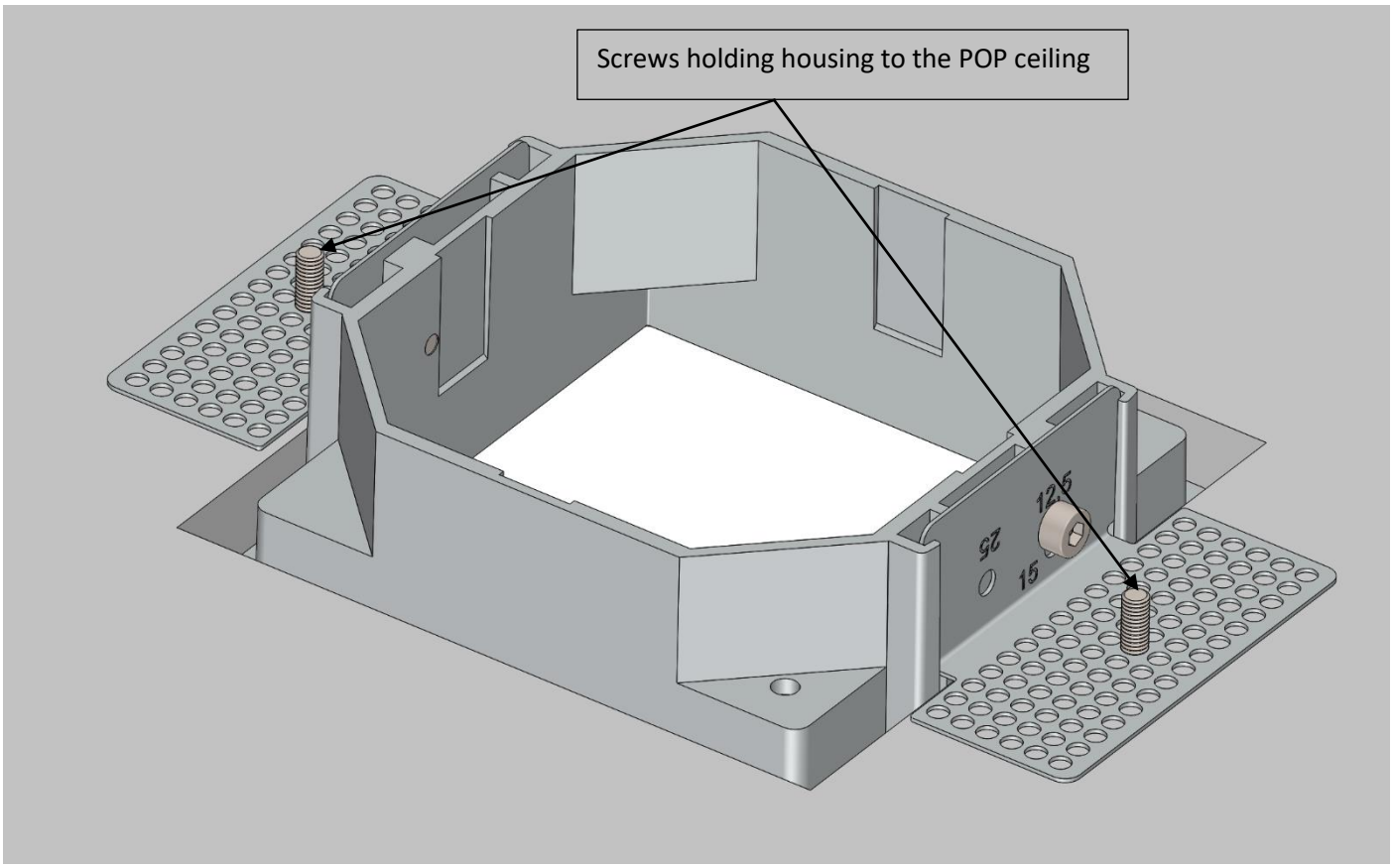

Rear View

Step 4: Finish the POP ceiling with Putti/POP. Fill the portion shown in Blue colour with Putti and make sure Putti doesn't goes into the inner side of housing

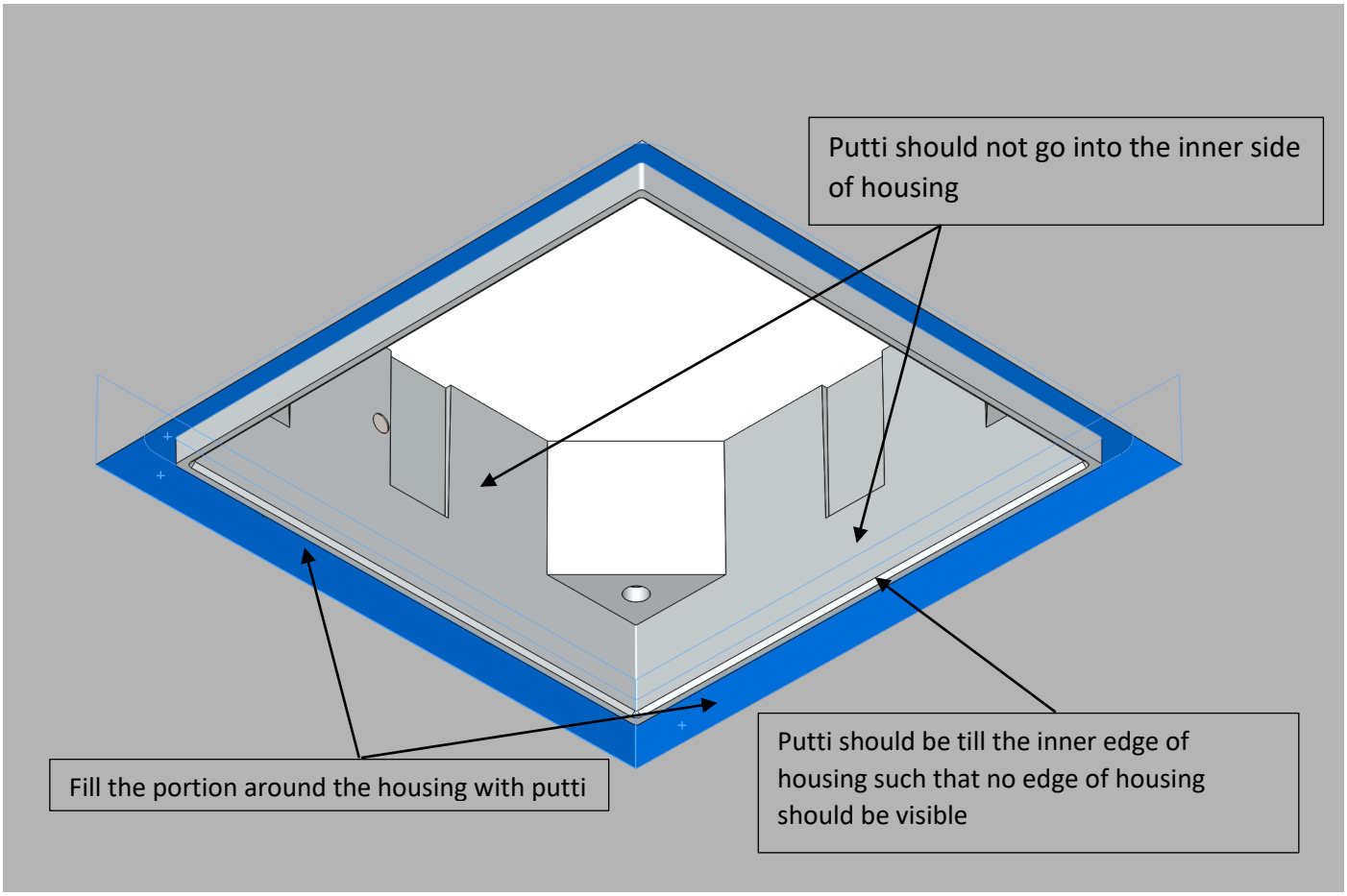

Step 5: Let the Putti dry properly.

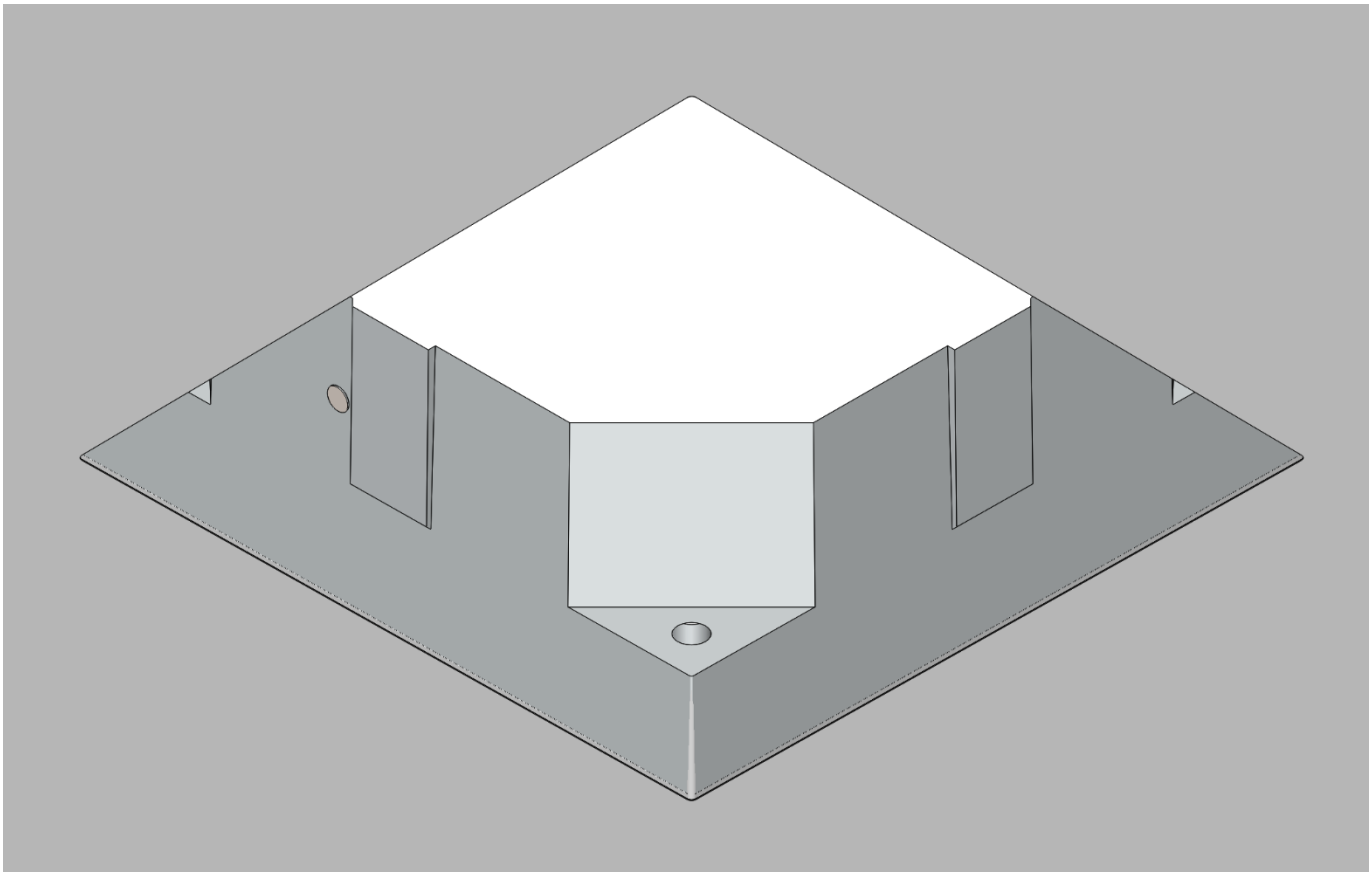

Step 6: Insert the driver through the housing and connect the fixture with driver with the help of quick connectors attached to the wires of driver and fixture, then screw the fixture to the housing.

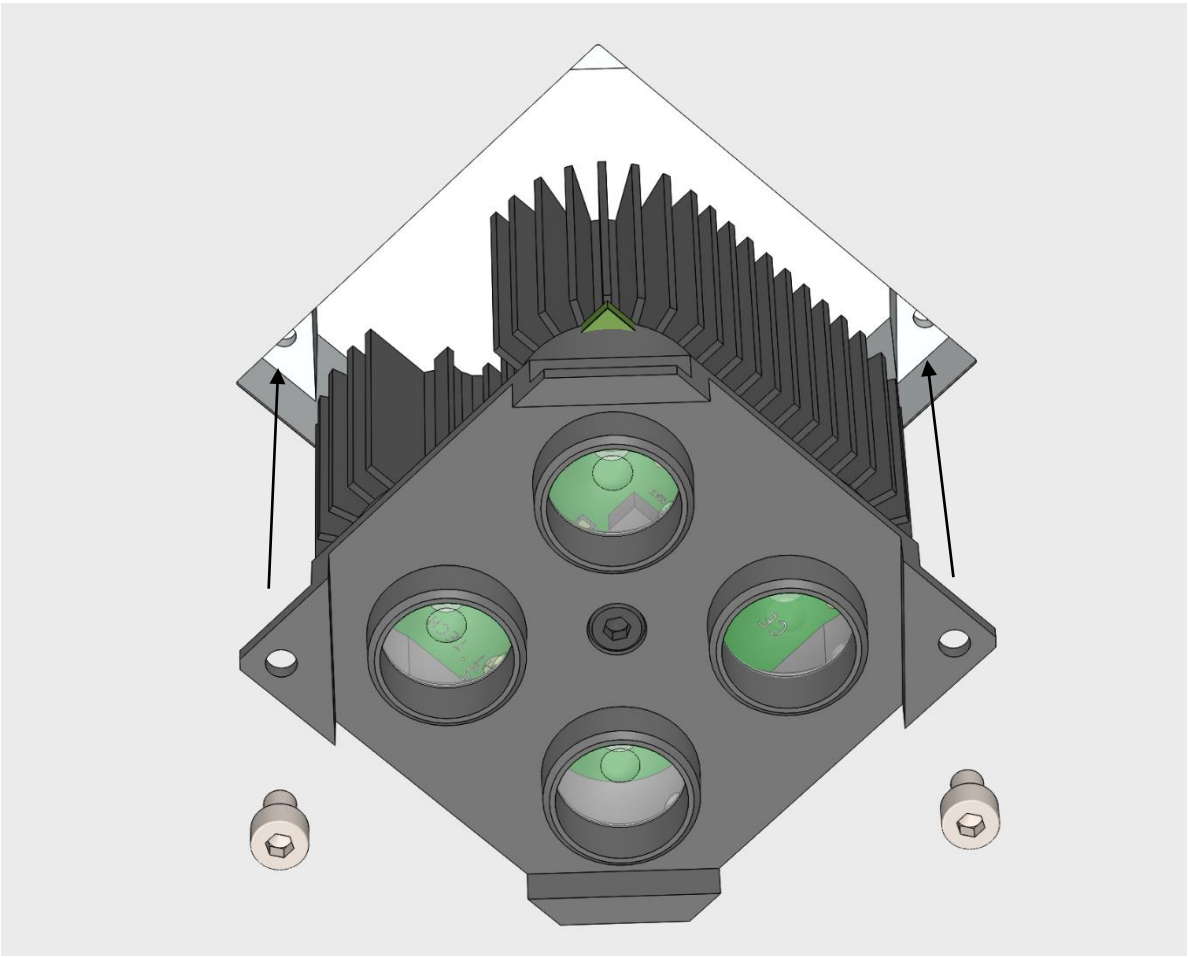

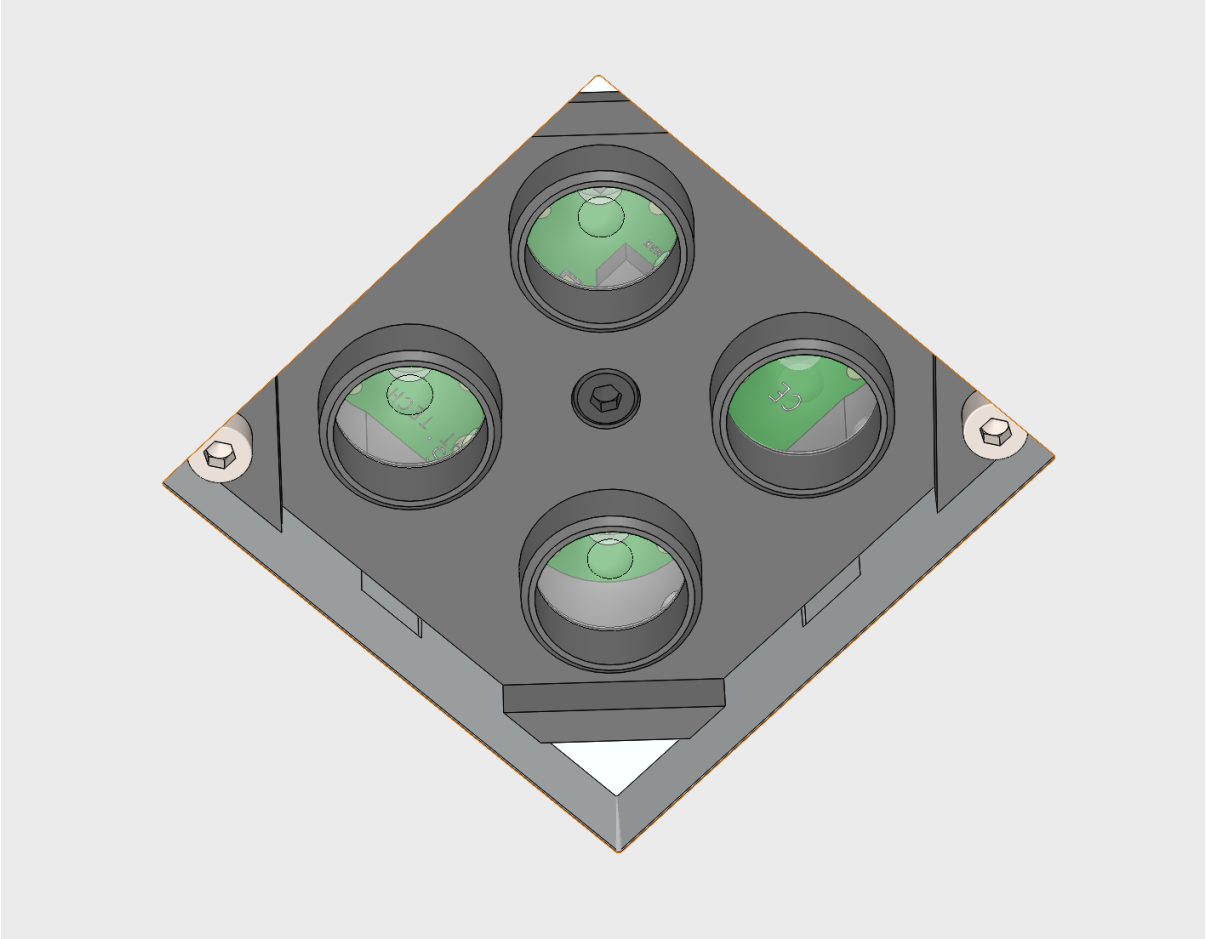

Step 7: Now fit the Zona Perdu Fascia in the fixture which is made to be snap fit.

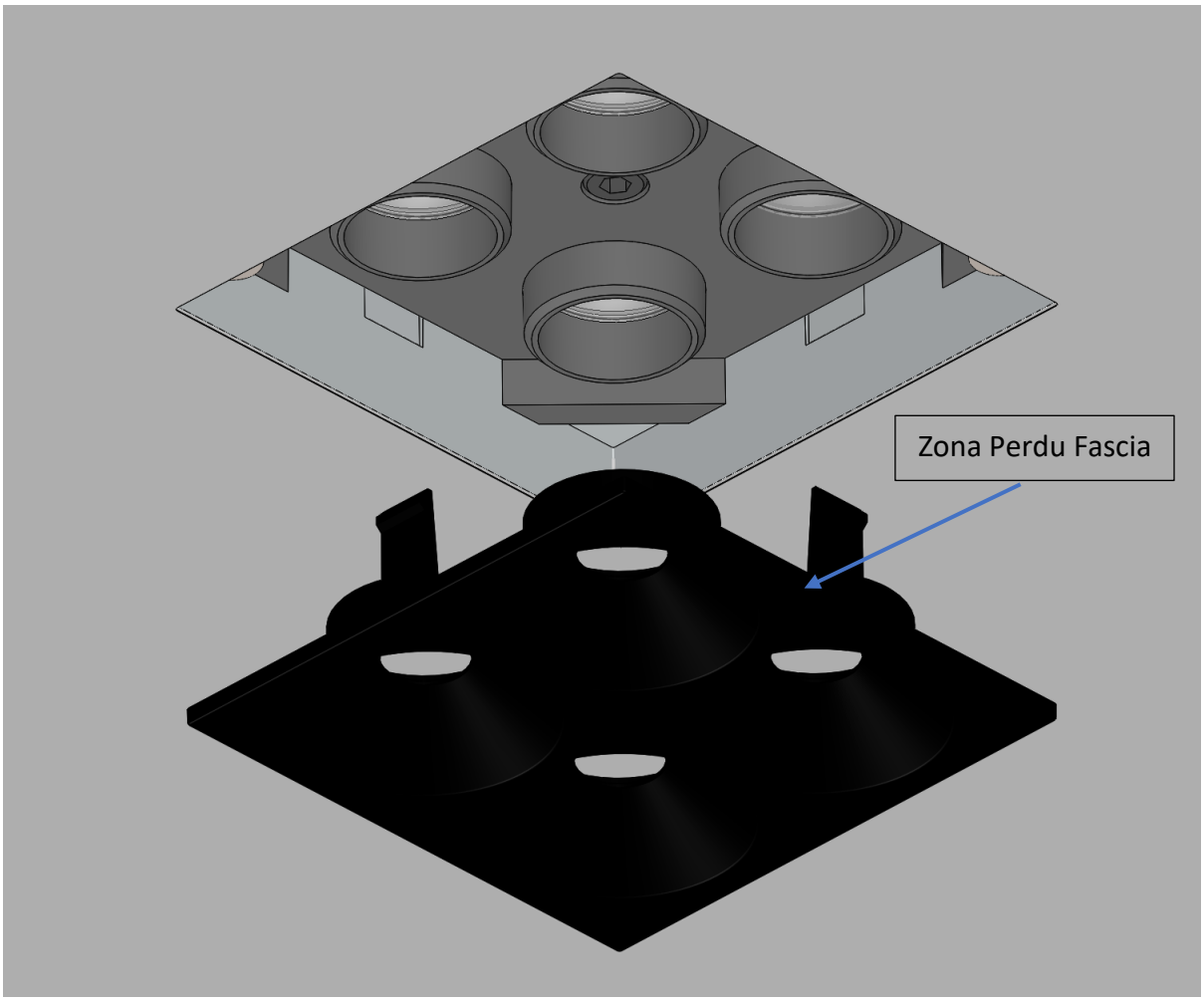

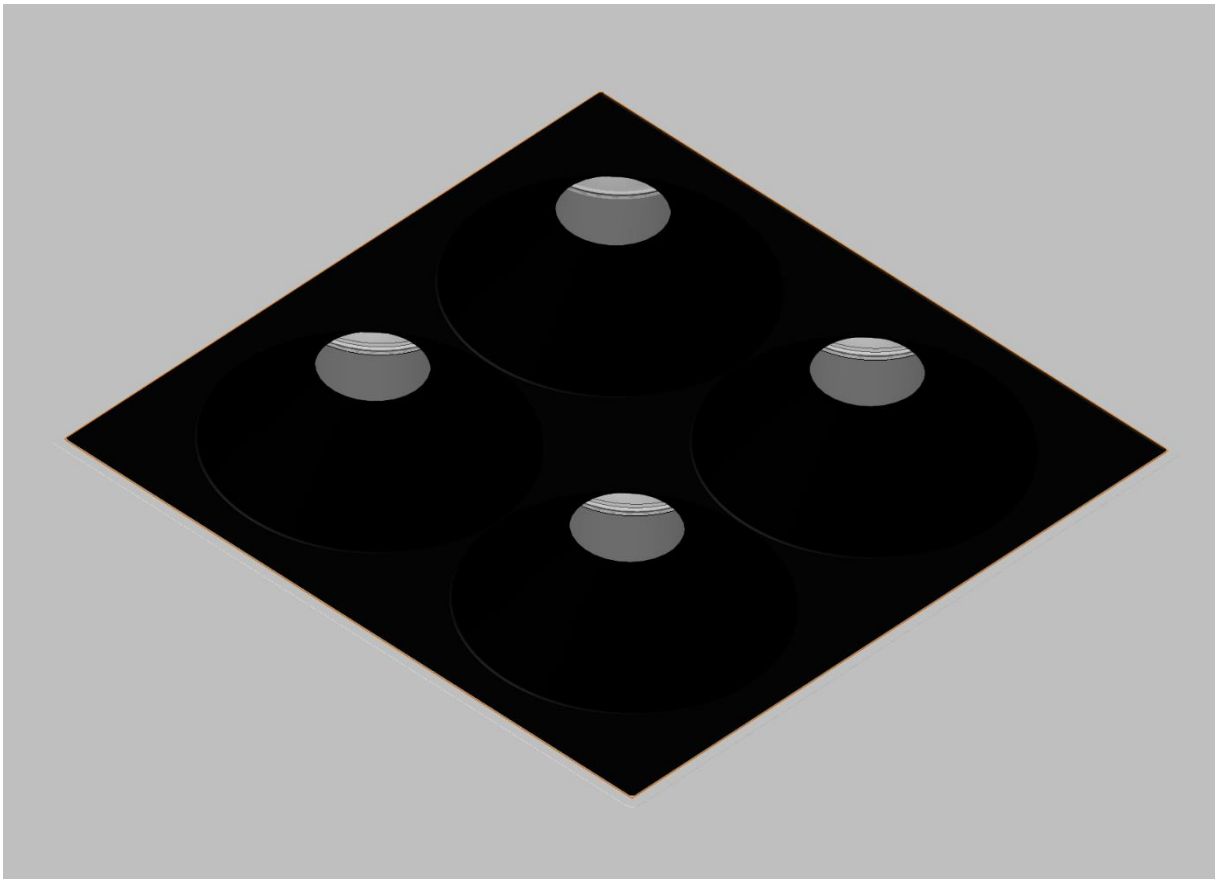

Installation is complete. Lights can be Turned On!